Signal Based Synchronization Fundamentals

Daniel Eaton

Chief Field Applications Engineer

EMERSON

Daniel Eaton
Chief Field Applications Engineer
CLA, CLED, 20 years “doing” w/ NI
Daniel.eaton@emerson.com

We are here to help!

- Pull us in to design conversations
- Let us help de-risk projects
- Tell us what you want to learn about next

Goals for Today

The Basics	Know Your Requirements → Pick Your Synchronization
Signal Based Synchronization	Common Vernacular
	Common Approaches
Signal Based Synchronization: The NI Way	The NI PXI Approach
	NI TCLK + NI PXI for Picosecond Synchronization

The Importance of Synchronization

EMERSON

Why?

Coordinate data signals relative to each other

Coordinate data signals relative to time

Poor synchronization leads to inaccurate results

When?

Data acquisition is being performed by multiple devices

- Multiple PXI modules in a single chassis
- Distributed across multiple PXI chassis

How Much Synchronization Do You Need?

Do you even have to care?

A Thermocouple vs RF

- 10 Hz vs 200 MHz carrier frequency
- Slow physical phenomenon → Nearly instant phenomenon
- 10s of microseconds → 10s of picoseconds
- With respect to time → with respect to other devices
- (my opinion) Eliminating drift is a must regardless of application

Know Your Requirements → Pick Your Path

Signal-Based Synchronization

- No external time reference
- System is physically connected
- Offers the highest precision of synchronization
- Limited to cable distances of 200 m

Protocol-Based Synchronization

- Uses an external time reference
- IEEE 1588, GPS, and IRIG-B
- Useful for systems with a high number of nodes
- Nodes are connected through a network

Synchronization Methods Compared

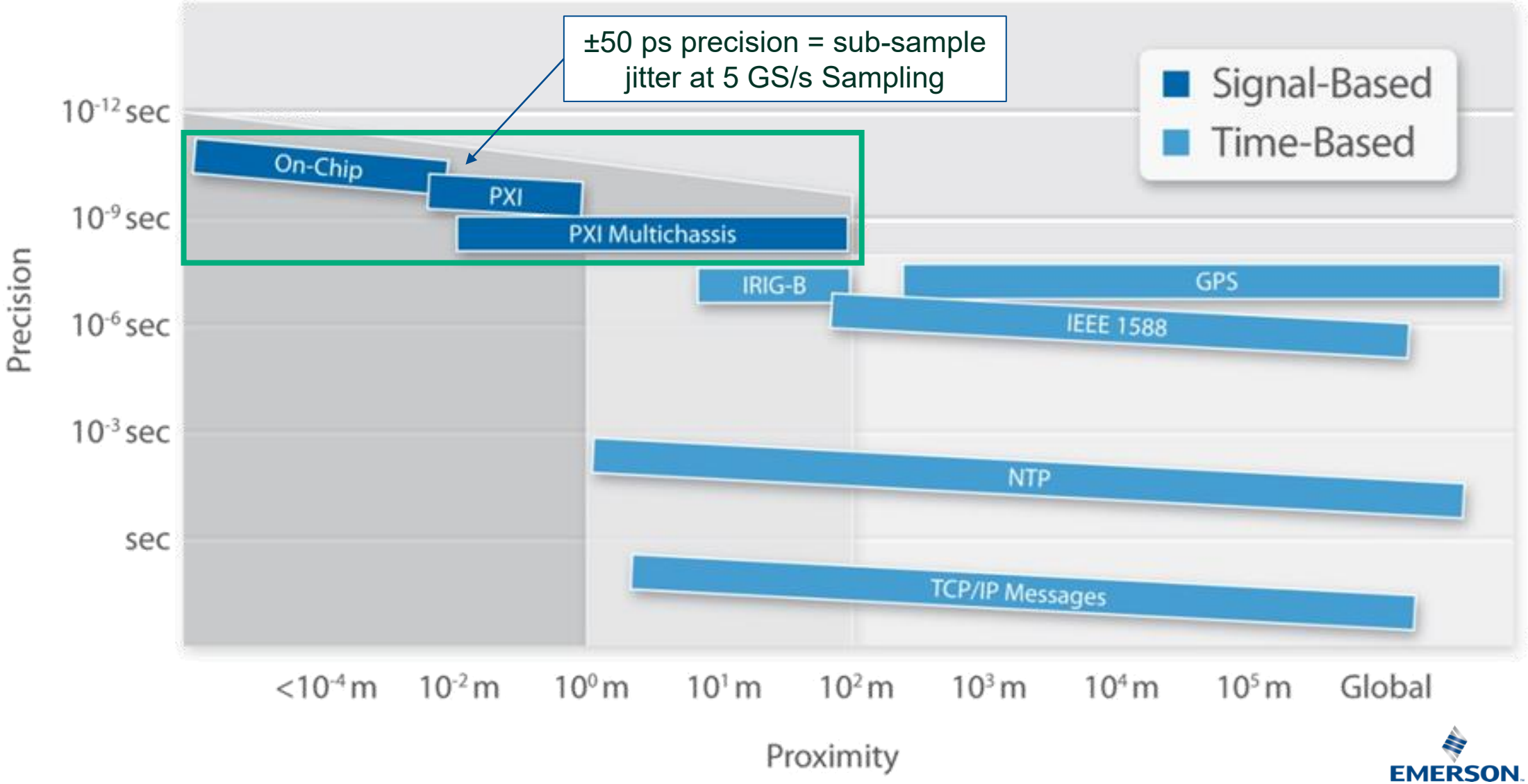

If 1 microsecond is enough… NI TSN Enabled Devices…

TSN Synchronizes multiple devices with no programming required

Formalized as IEEE 802.1 AS (an IEEE 1588 profile)

Synchronized networked systems within 1 µs of network time

Synchronize distributed measurements within 1 µs

- Same start time
- No drift over time

How: Plug in ethernet cables…

Supported Devices: TSN Enabled cRIO, cDAQ, & FieldDAQ

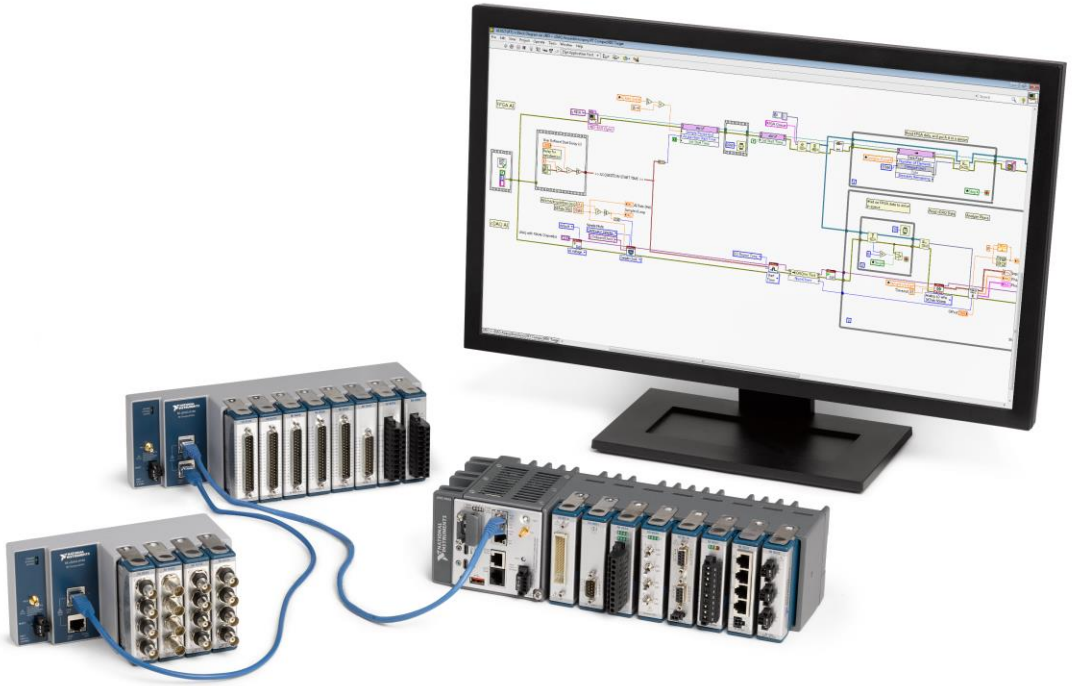

CALLBACK COMING…

Signal Based Synchronization

EMERSON

When to Use Signal-Based Synchronization

- Tight sample synchronization needs
  - Sub-nanosecond requirements
- Co-located hardware
  - Signal integrity diminishes over long distances
- Common sample clocking
  - Minimize device-to-device jitter and skew

Common Terms

Clocks

Clocks

Periodic digital signals used to time the acquisition of data

Sample Clock

Controls the timing of the removal samples from a data acquisition device

Reference Clock

A signal referenced by other systems' clocks to derive their own clock signals

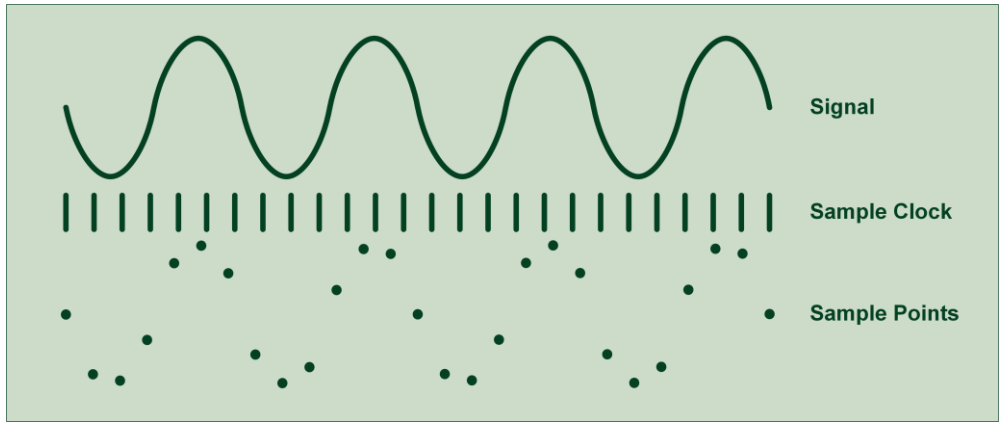

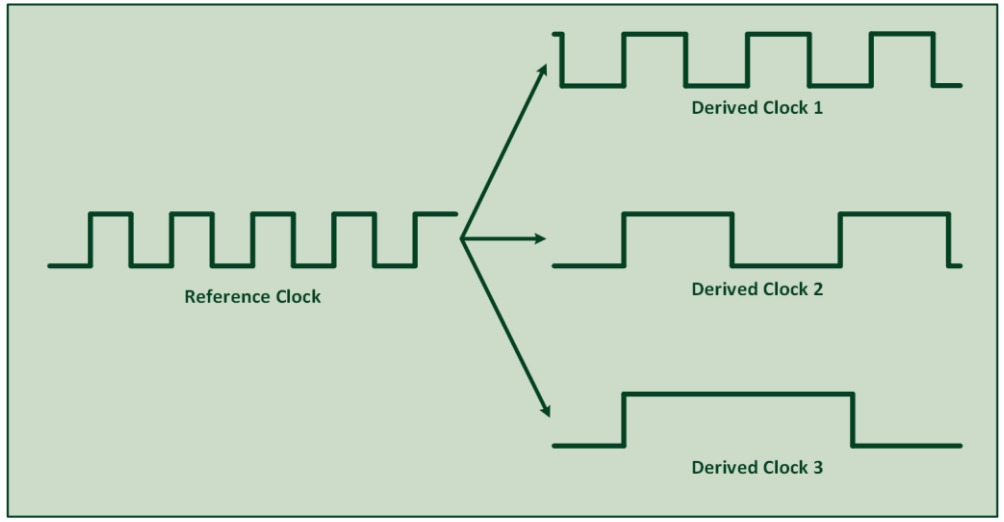

Trigger

A trigger is a command that controls an acquisition.

Examples of Software Triggers

- Button press
- Alarm state
- External program

Examples of Hardware Triggers

- PXI backplane triggers
- External Source (PFI Line, Digital Input)

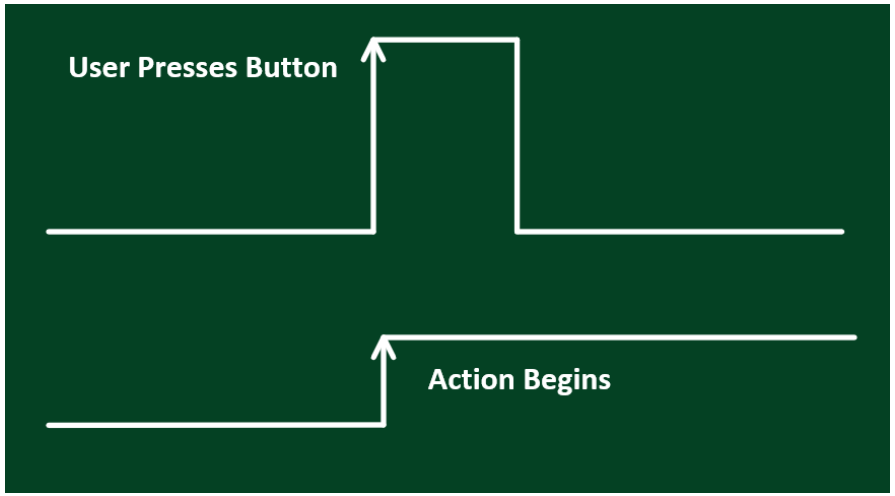

Phase Locked Loop (PLL)

PLL is a type of feedback circuit that:

- Synchronizes phase of onboard clock with external timing source / reference clock
- Uses a Voltage Controlled Crystal Oscillator (VCXO)
- Allows multiple boards to lock to a shared reference signal

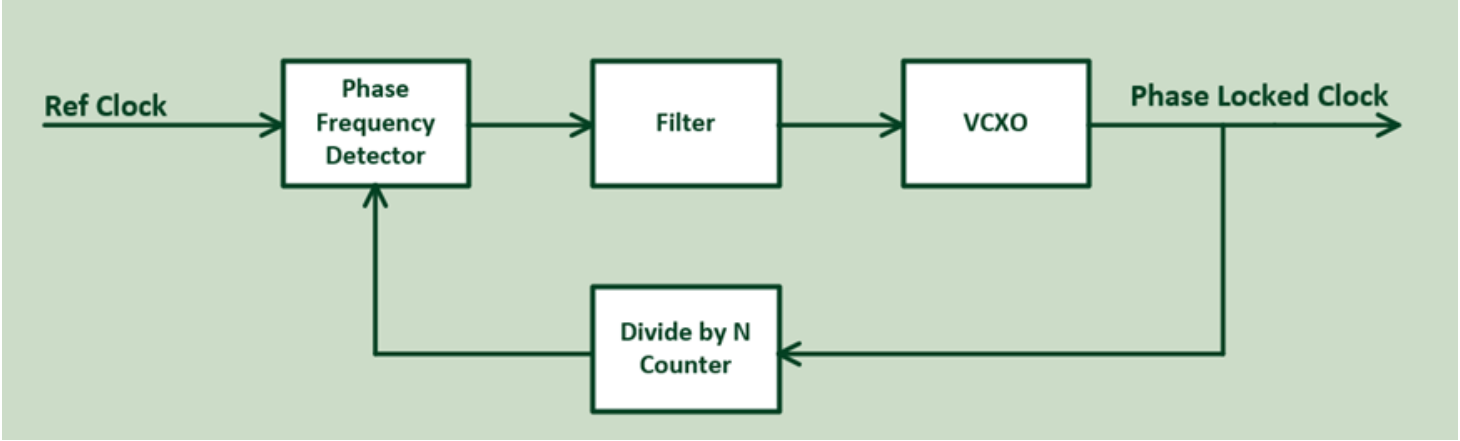

Common Challenges

Propagation Delay (component of skew)

Shifting of a clock or trigger by an offset in time

Roughly 1 ns/foot of cable

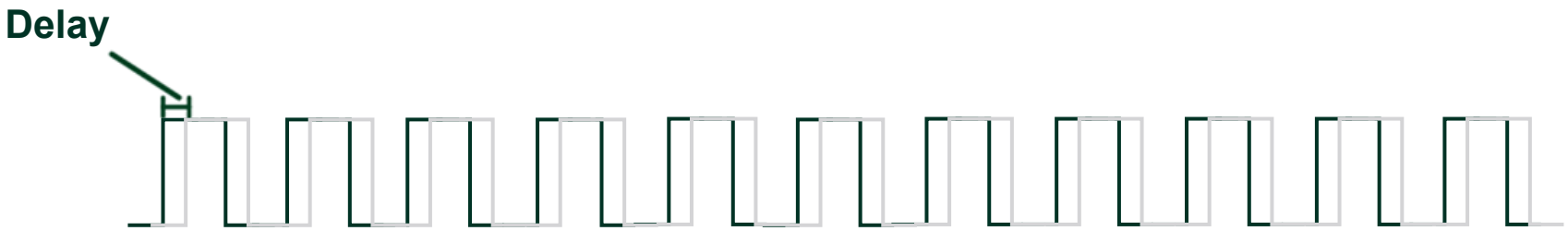

Drift

Occurs when two instruments are acquiring data at different sample rates

Error builds over time

Clock Drift

Errors grow as acquisition continues.

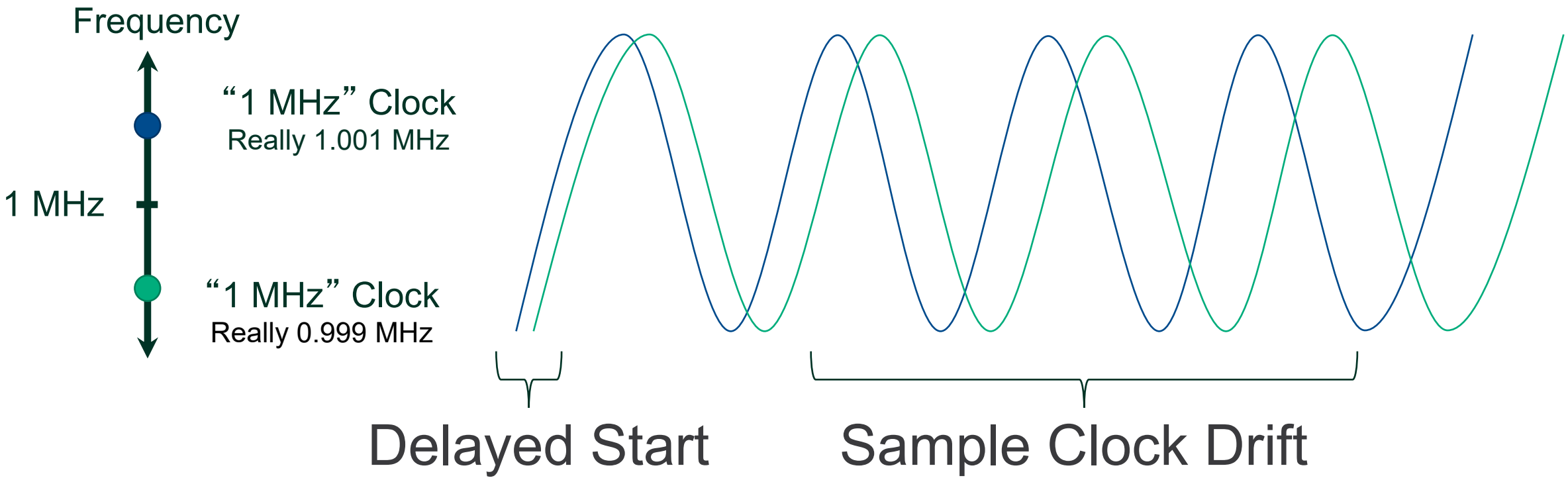

Jitter

Jitter is the deviation from the ideal timing of an event to the actual timing of an event.

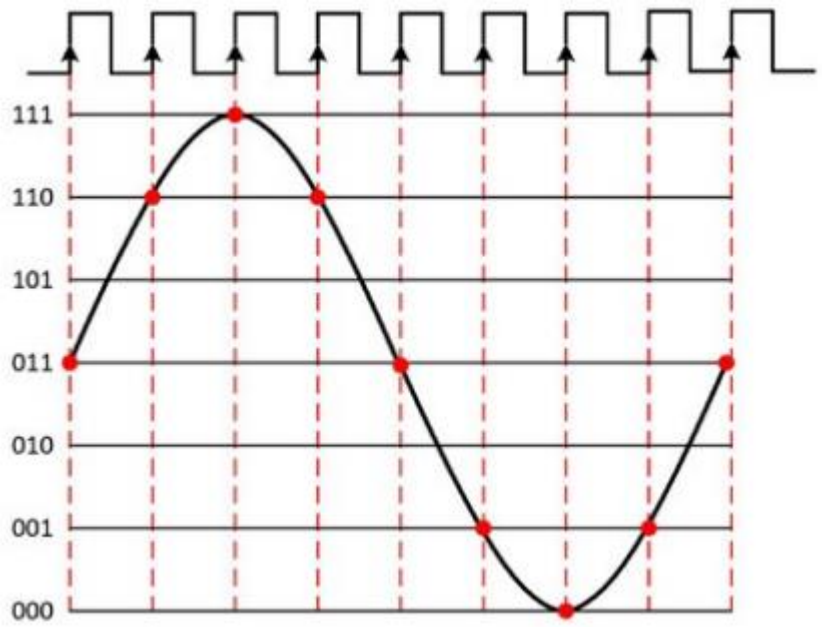

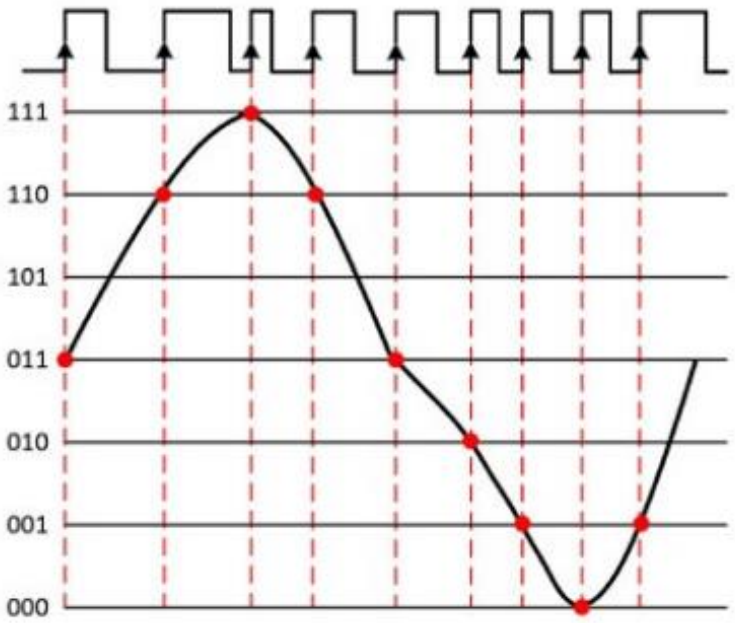

Skew

Skew is when the clock signal arrives at different components at different times.

Maintains clock period

Causes:

- Wire Length
- Temperature Variation
- Different Input Capacitance

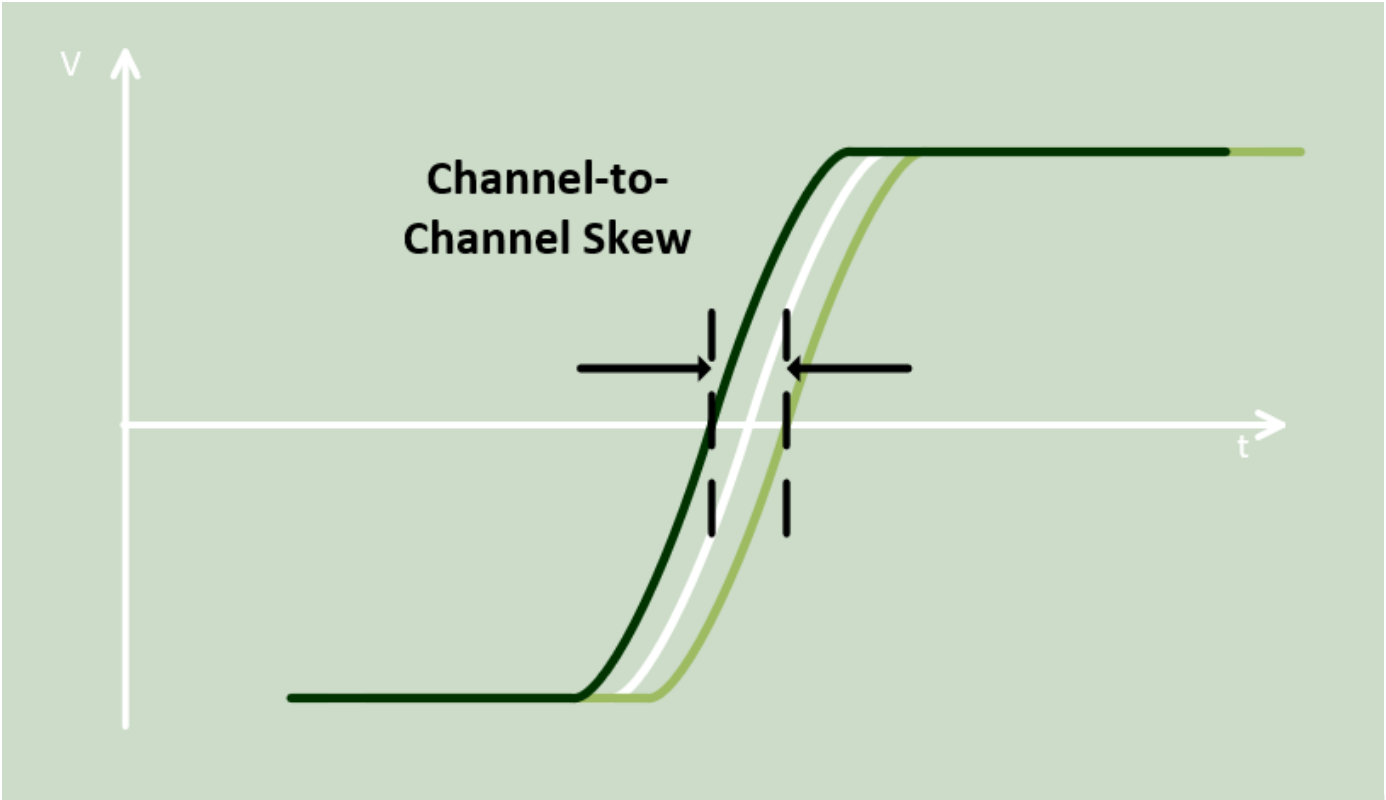

Edge Detection Inconsistencies

Distributing start time triggers and handling metastability

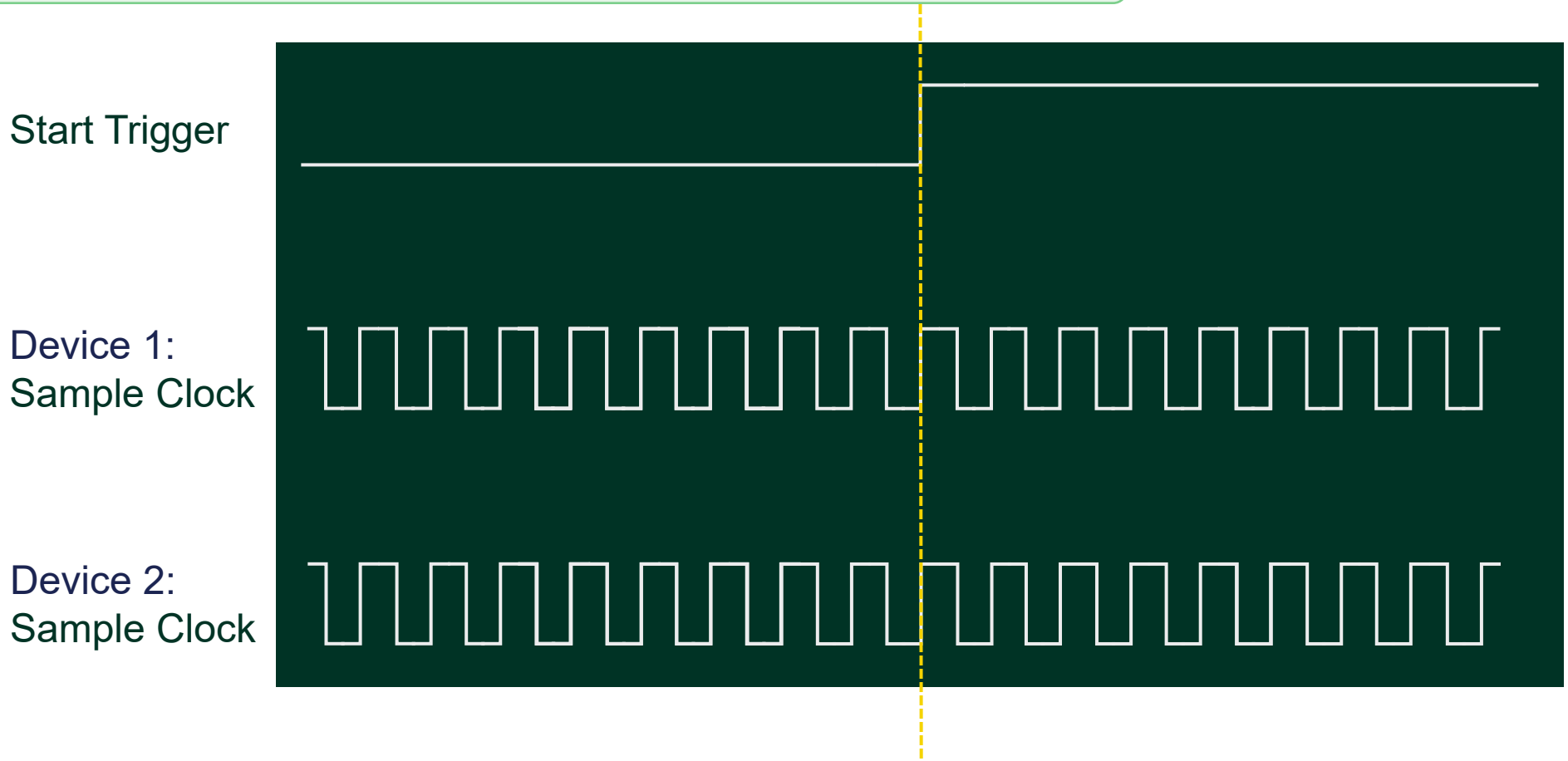

Common Methods

Demo System Setup

Device 1: MIO DAQ

- Generating Triggers / Clocks
- Generating Square Wave
- Looping back Square Wave

Wiring

- AI0: Reads Square Wave
- PFI4: Reads Start Trigger
- PFI0: Generates Square Wave
- PFI2: Generates Start Trigger; Clock

Device 2: cDAQ 9189 + 9215 (AI) + 9401 (DI)

- Read Triggers/Clocks
- Read Square Wave

Wiring

- 9215 AI0: Reads Square Wave
- 9401 DIO4: Reads Start Trigger, External Clock

Example Code Source

- https://github.com/eatondan/ni-LunchAndLearn-SignalBasedSynchronizationFundamentalsExamples
  - Source\Challenges in Synchronization - NI DAQmx

Demo 1: The Wrong Way…

- No Start Triggers
- Local Clocks

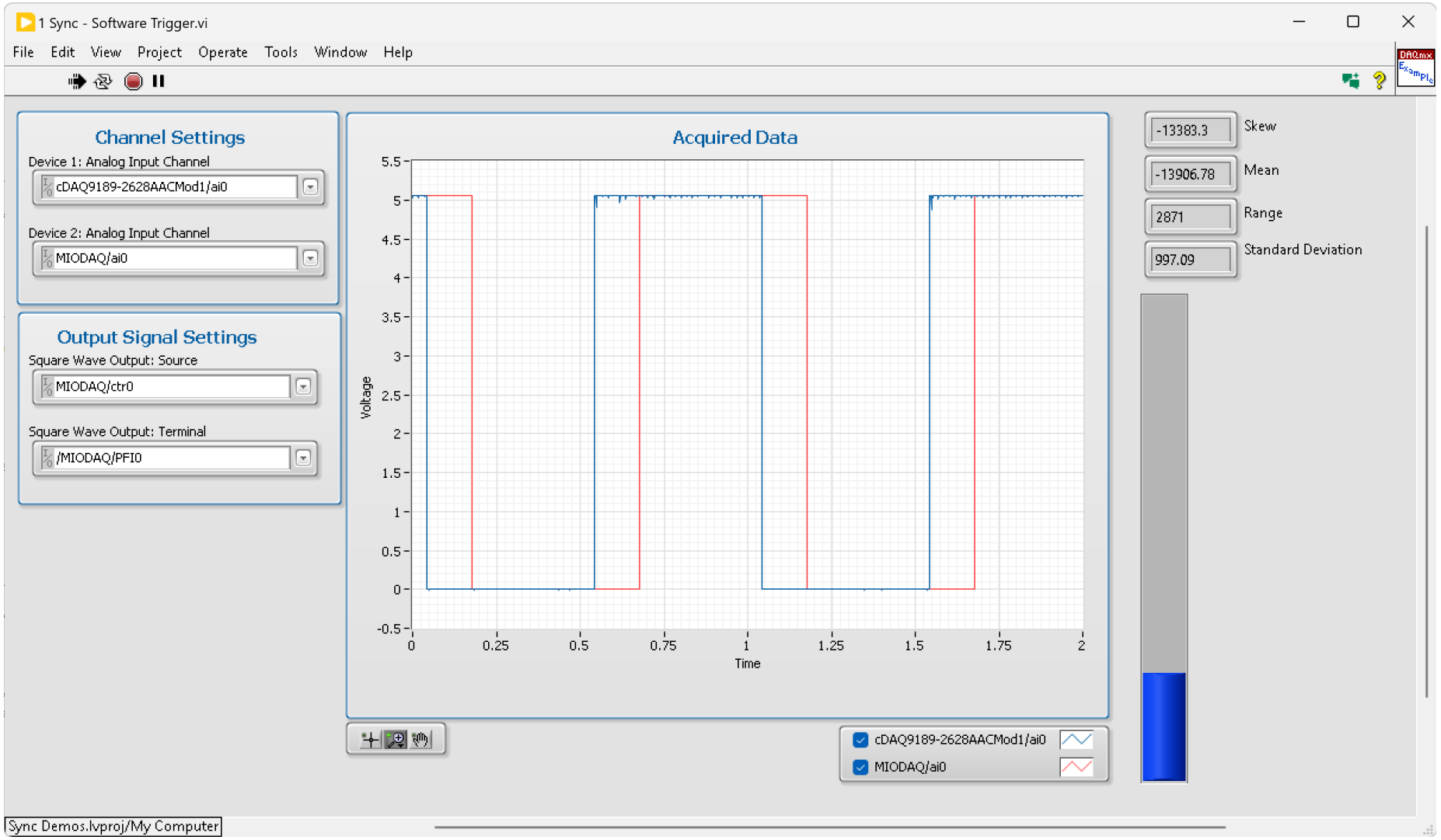

Demo 1: The Wrong Way…

- No Start Triggers
- Local Clocks

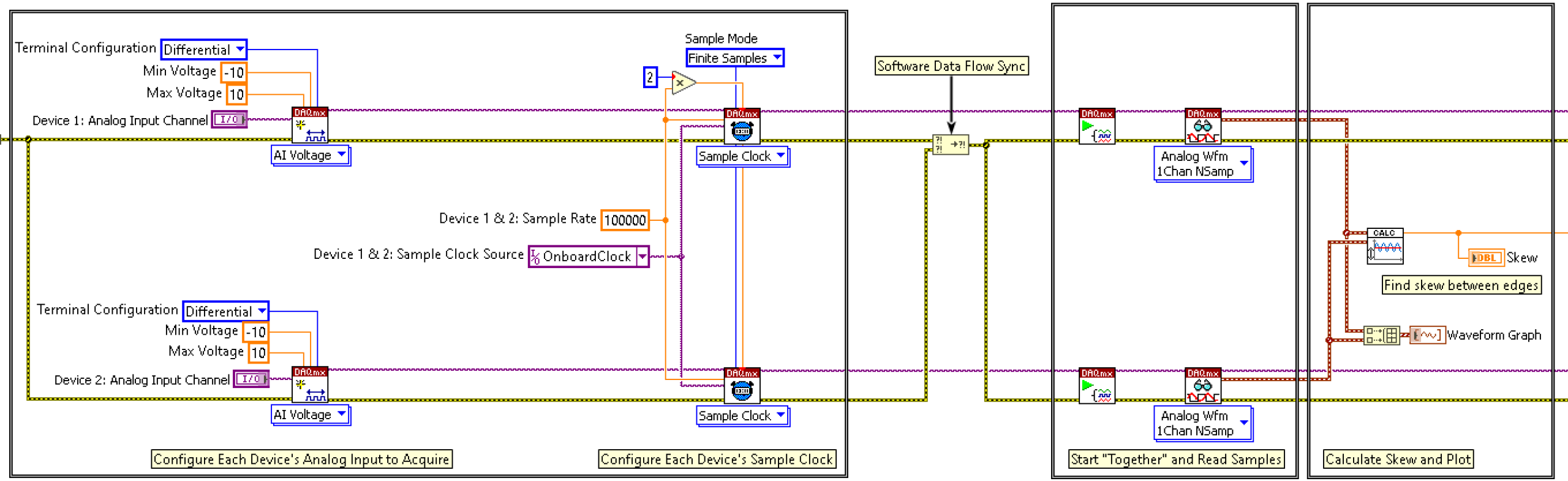

Approaches to Synchronization

- Share a start trigger → Start devices together
- Share a sample clock → Start devices together; Eliminate drift; Single rate only
- Share a reference clock + Start trigger → Start devices together; Eliminate drift; Multi-rate

Demo 2: The Wrong Way…But With a Start Trigger

- Share a start trigger → Start devices together!!
- Local Clocks → Drift

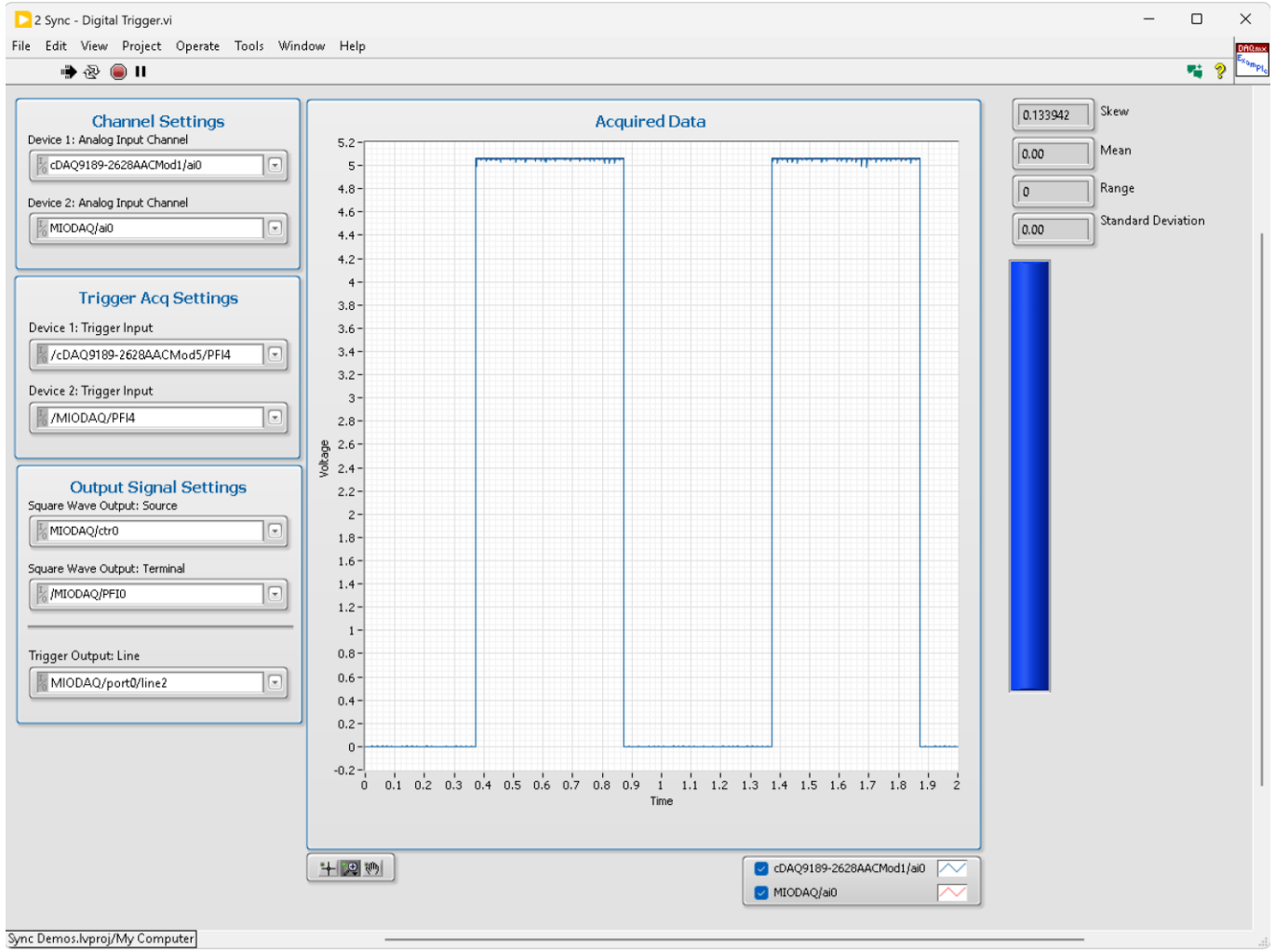

Demo 2: The Wrong Way…But With a Start Trigger

- Share a start trigger → Start devices together!!
- Local Clocks → Drift

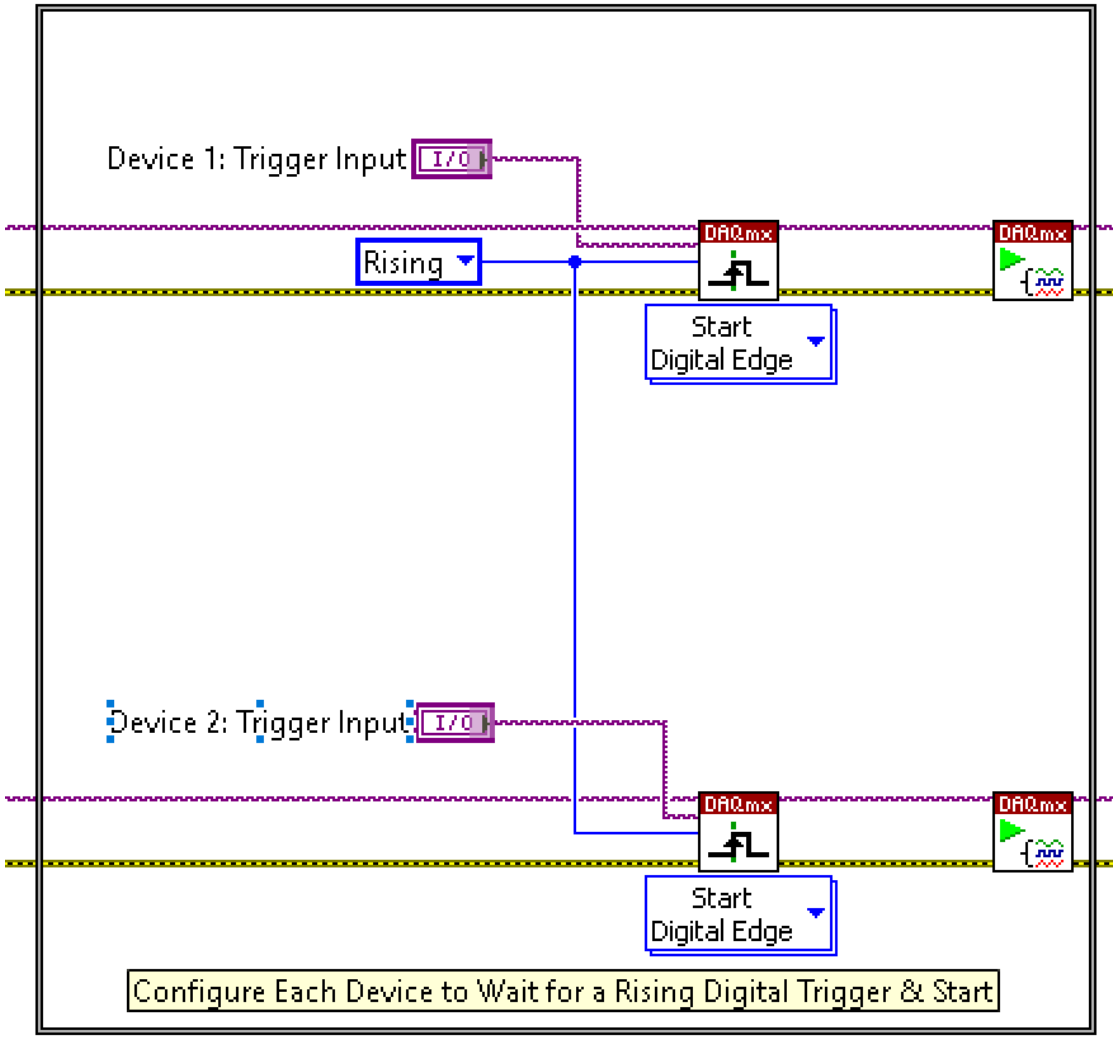

Demo 3: The Wrong Way…But With a Start Trigger

- Share a start trigger → Start devices together!!
- Local Clocks → Drift

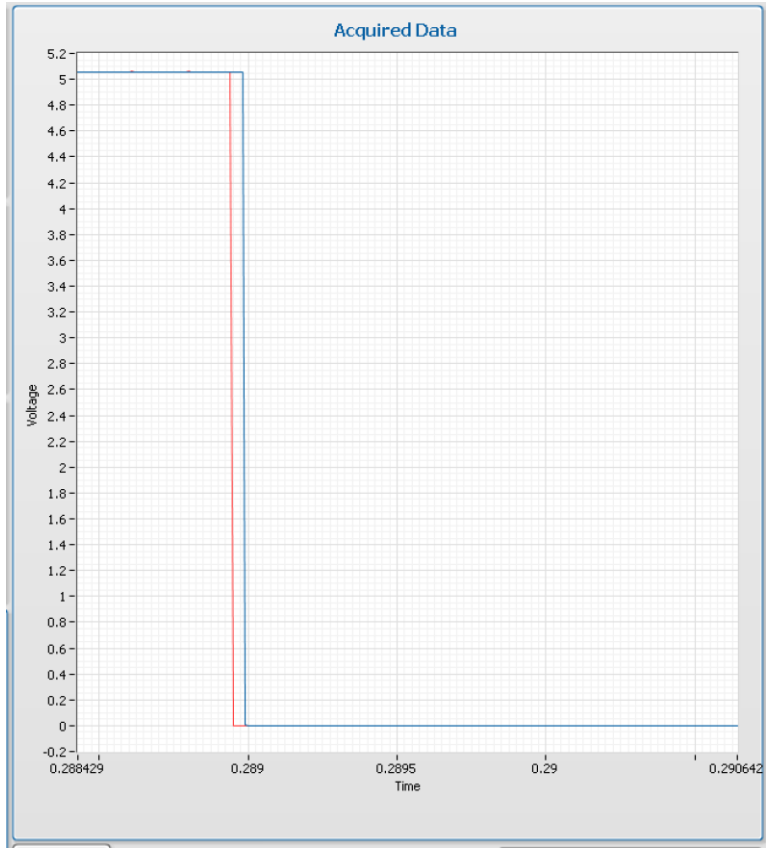

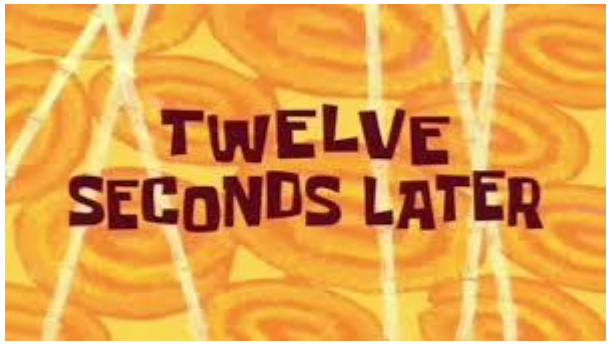

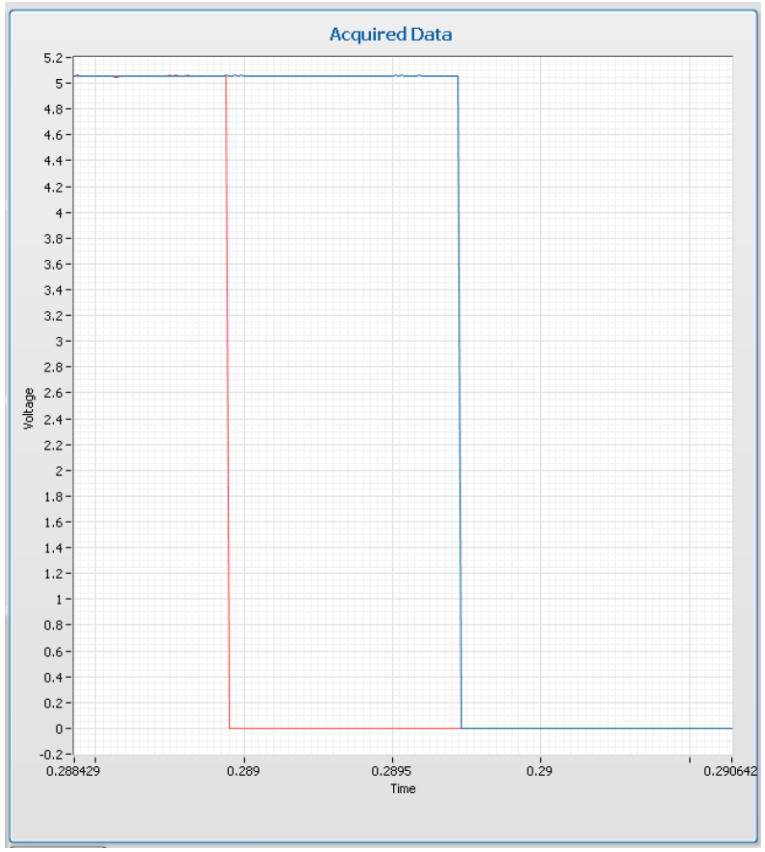

Clock Drift

Errors grow as acquisition continues.

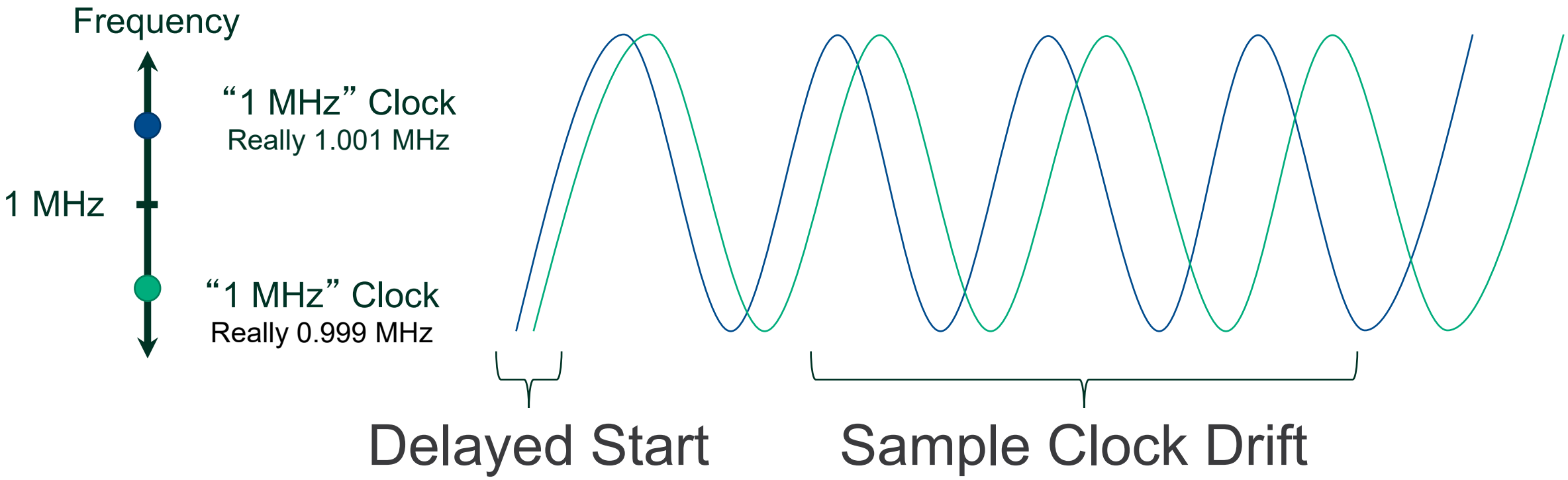

Demo 4: Almost…There…But SKEW

- Shared Clock → Start devices together; Eliminate drift; Single rate only; Still SKEW

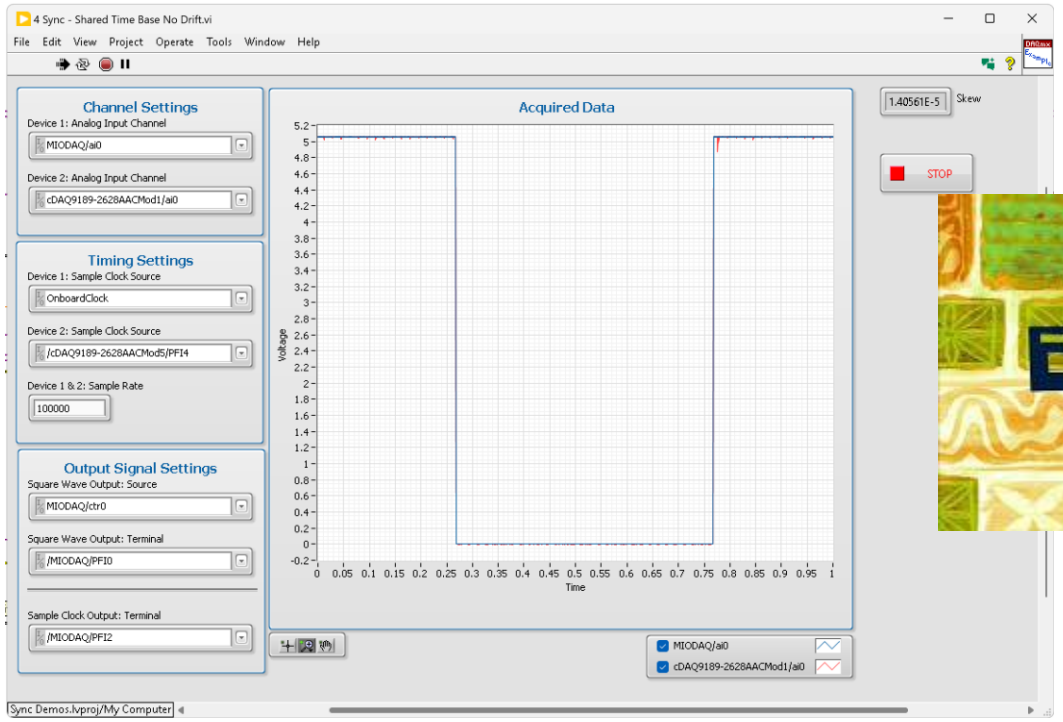

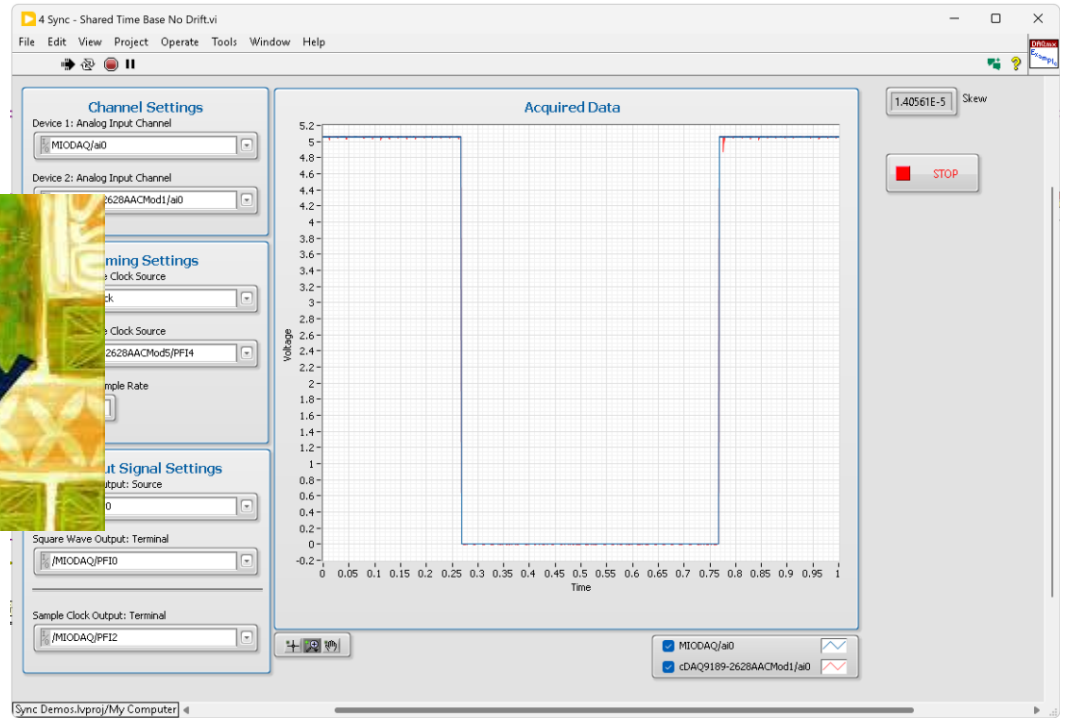

Demo 4: Almost…There…But SKEW

- Shared Clock → Start devices together; Eliminate drift
- Single rate only
- SKEW!!

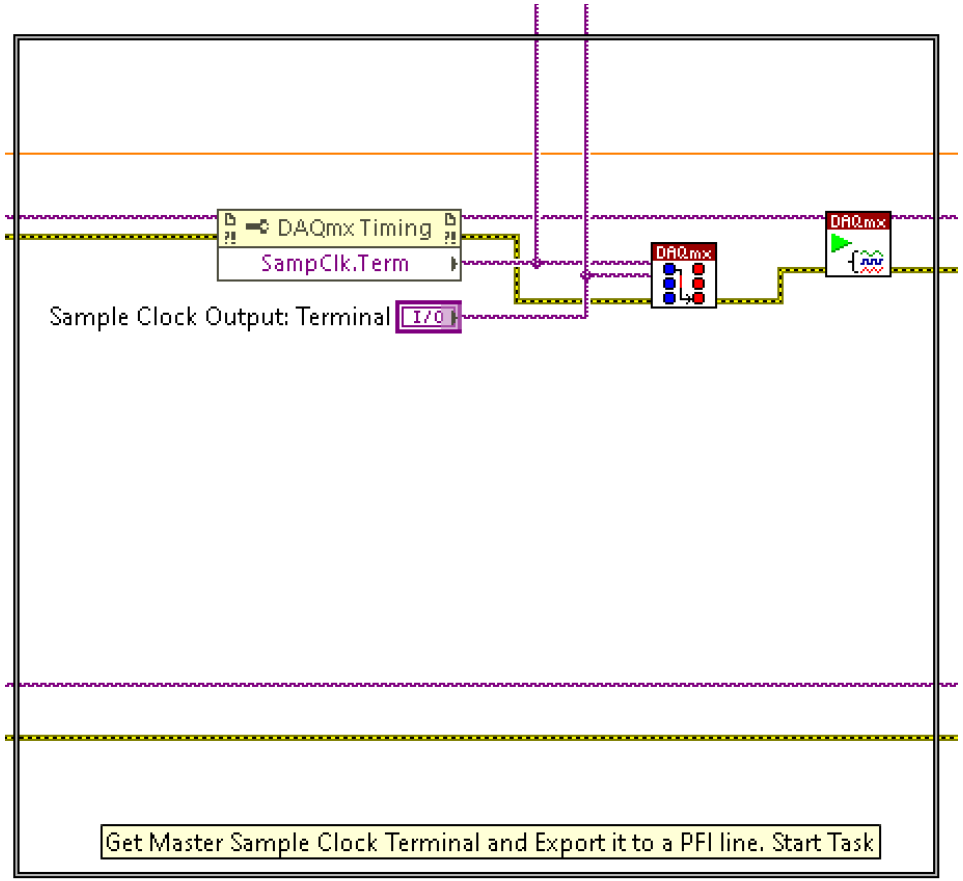

Signal Path for Clock

Device 1: Internal Clock

Device 2: Device 1 Internals → PFI line → Wire → 9401 Acq → Digital Level Logic → cDAQ Backplane → 9205

Demo 5: CALLBACK to Know Requirements → Pick Approach

- NI TSN Easy Button…For General DAQ Applications
- Agree on time → Start Together and Stay Together…Simpler Code

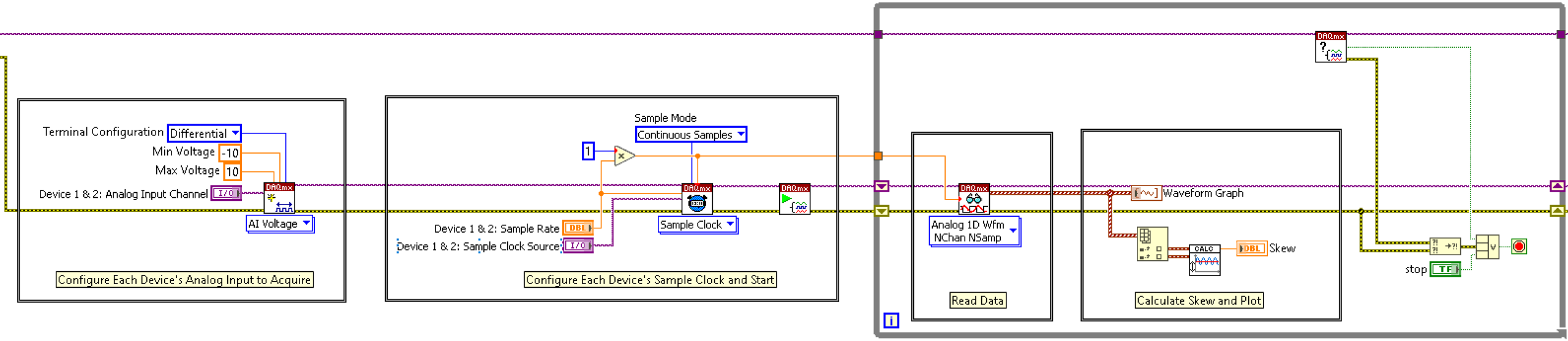

The most-right way

- Share a reference clock + Start trigger → Start devices together; Eliminate drift; Multi-rate
  - Triggers must have length matched cables
  - Highly Stable, Master Reference Clock with length matched cables
  - Routed to every device (no internal clocks allowed…)
  - Each device divides down or syncs to Master Reference Clock (multi-rate!!)
- Might be good enough
  - …You will still have skew…just much less…
  - …You will still have edge detection inconsistencies…

DOUBLE CALLBACK COMING…

Different Approaches

Common Methods – Different Approaches

Boxed Instruments

Supported: Device Dependent
Wiring: External, Manual
Config: Different per device type

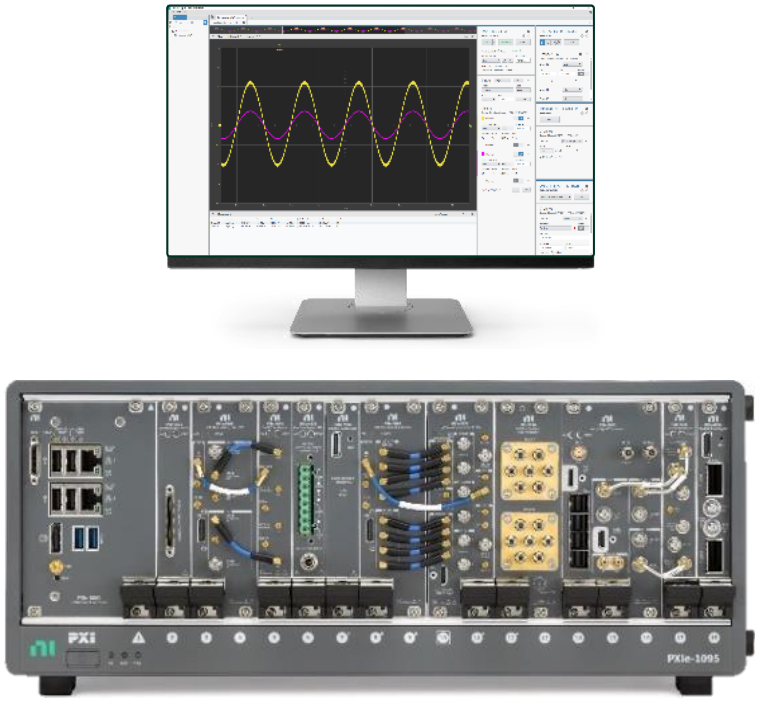

PXI Modular Instruments

Supported: Yes
Wiring; Internal, Software Defined
Config: Common API

Integrated Timing & Synchronization With PXI

- Requires length matched cables for clocks and triggers
- Static configuration; no flexibility
- Extremely difficult with multiple instrument types or clock rates

- Everything is built into the backplane; no external cabling
- NI driver SW manages all resources with pico-second level accuracy
- Multiple instrument types and clock rates are trivial to combine

The PXI Approach

PXI Hardware Tools for Synchronization

The PXI backplane

- The PXI chassis contains resources to enable sophisticated synchronization, timing, and triggering.

NI PXI timing and synchronization modules

- These are specialized modules which interface to PXI backplane timing and synchronization resources for advanced coordination and control of measurement and signal generation timing.

The PXI Backplane

Available resources:

- Clocks
- Triggers
- Timing Slots

Some resources may only be available to PXI Express or PXI Express Hybrid slots

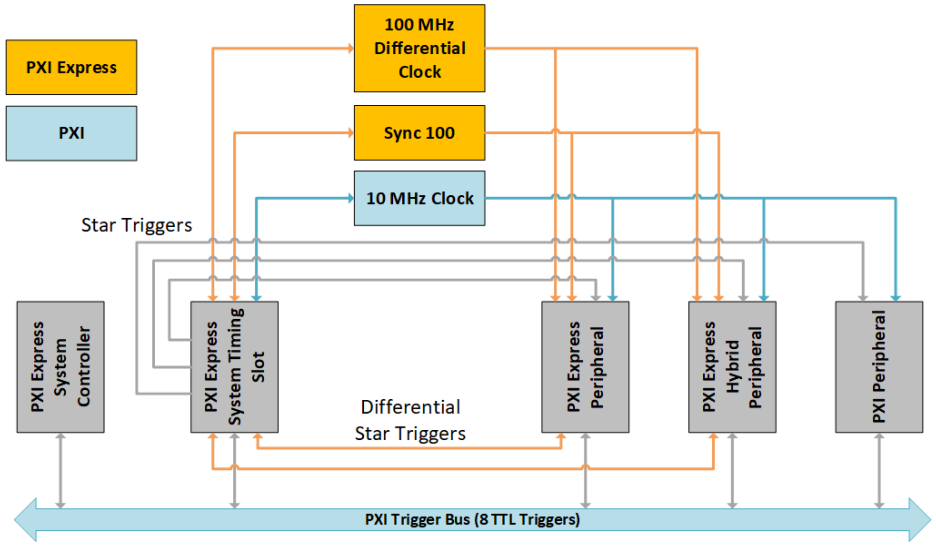

PXI and PXI Express Backplane Synchronization Resources

	PXI	PXI Express
Backplane Clock	10 MHz	10 MHz, 100 MHz differential
Trigger Bus	8x single-ended trigger bus*	8x single-ended trigger bus*
Star Triggers	1x single-ended star trigger	1x singled ended star trigger, 8x differential star triggers

PXI Backplane Clocks

Provide common reference clocks to all module slots

- 10 MHz clock provides <1 ns device-to-device skew
- 100 MHz differential clock provides <100 ps device-to-device skew
- 100 MHz differential clock provides higher frequency ceiling and increased noise immunity over 10 MHz clock

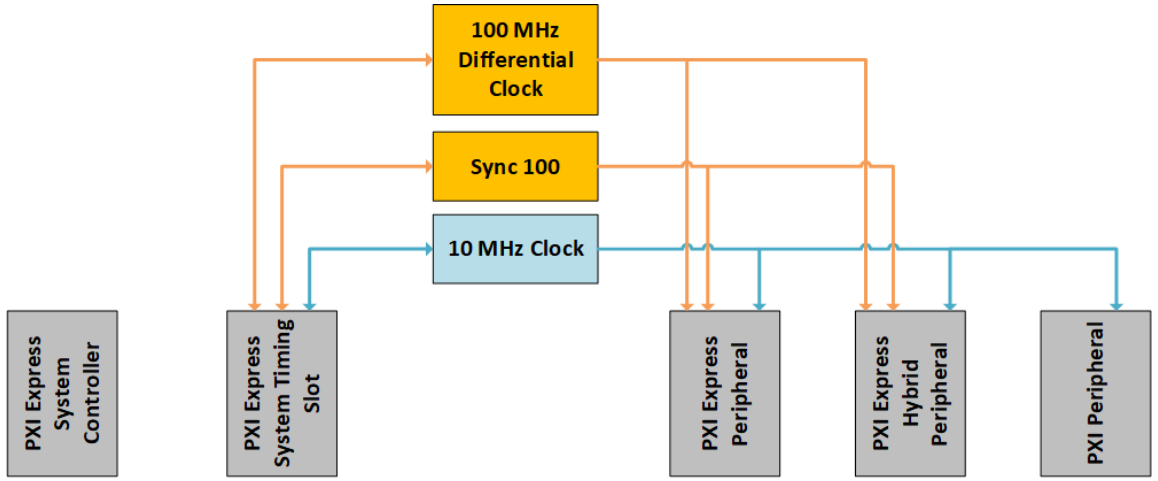

PXI Backplane Single-Ended Trigger Bus

General purpose synchronization lines accessible to all module slots

- Potentially significant propagation delay depending on signal loading and module position
- Signal integrity may vary depending on hardware and configuration
- Best used for trigger signals where device-to-device skew of up to 80 ns is acceptable

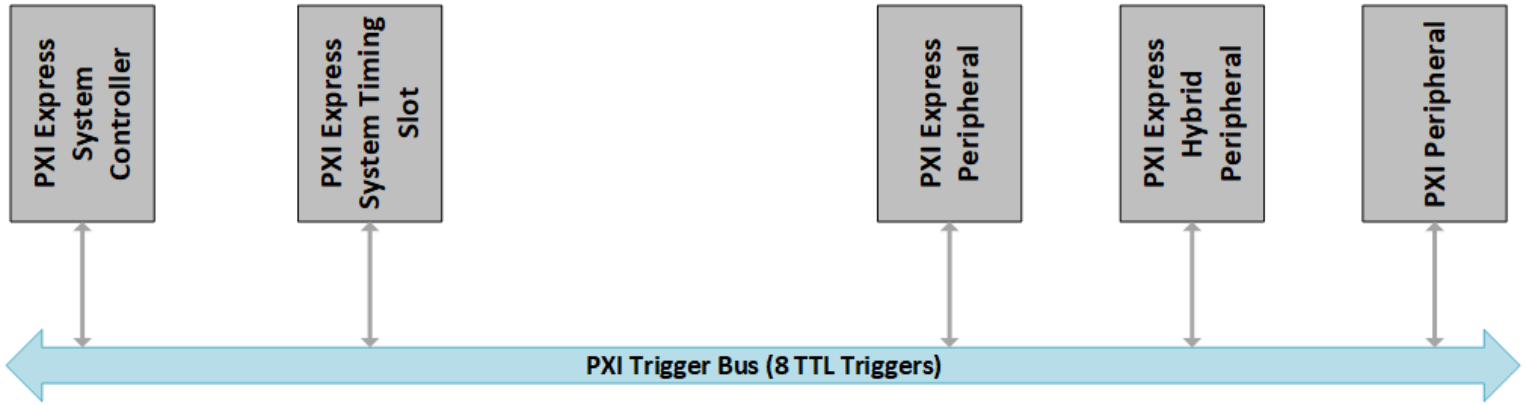

PXI Backplane Star Triggers

High-performance triggers available to all module slots

- Can only be controlled from specific slots
- Traces are length-matched and allow propagation delays of <5 ns and device-to-device skew of <1 ns
- Best used for applications which require precise triggering to multiple modules

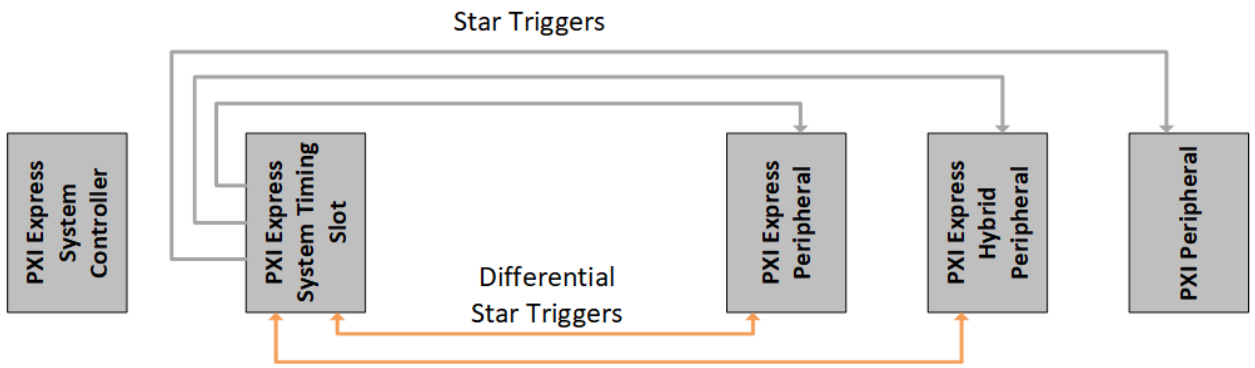

PXI Chassis Timing Slots

Offer direct access to star triggers, trigger bus, and backplane clocks for timing and synchronization PXI modules

Timing and synchronization modules installed in chassis timing slots may import external clock signals and override the 10 MHz backplane clock

Star triggers **require** a timing and synchronization module installed in a chassis timing slot

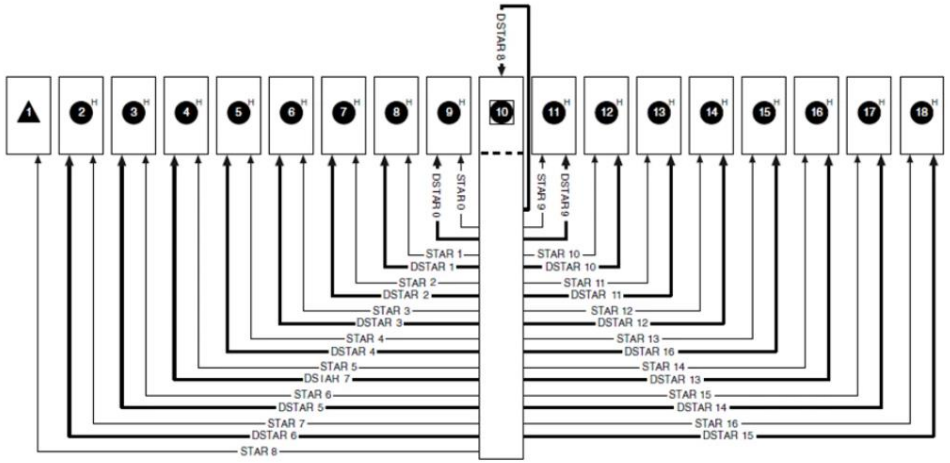

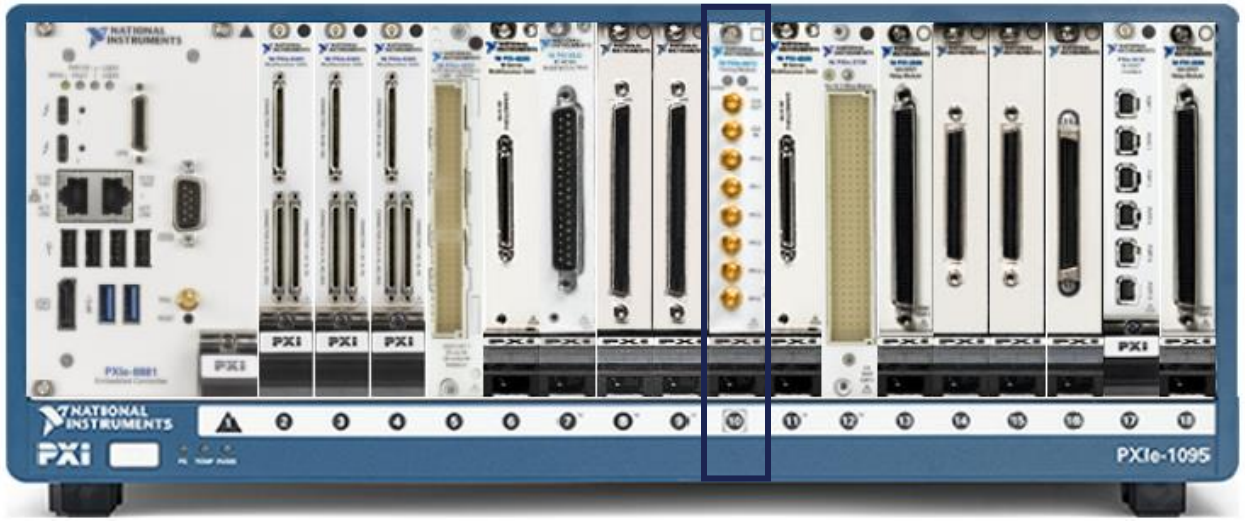

NI Timing and Synchronization Modules

- Import and export reference clock signals directly to/from the PXI backplane
- Generate high quality clock signals
- Access to PXI trigger lines and star triggers
- Synchronize to an external time reference
- Requirements Change…Swap the card

Need Time Based Sync?
NI PXI 6683H

Need Signal Based Sync?
NI PXIe 6674

Multi-Chassis Synchronization

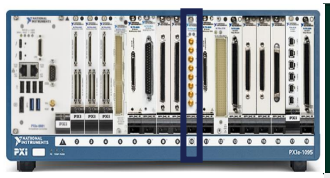

PXI-Chassis (Master)

PXI-6683 (Sync)

ClkOut

ClkIn

PFI0

PFI1

Length-Matched Cabling

ClkIn

PFI0

PXI-6683 (Sync)

PXI-Chassis (Slave)

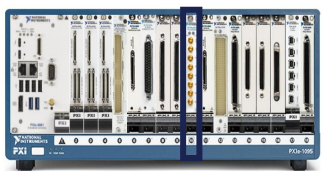

Approaches Compared

Propagation Delay

(Assuming devices are capable)

- Length Matched, External Wiring
- Does not account for internal device delay

- External Triggers/Clocks wire to Sync Module
- Sync Module route to PXI backplane
  - Length Matched, Internal Wiring
- Highest speed devices provide internal skew compensation

Drift

Occurs when two instruments are acquiring data at different sample rates

Error builds over time

Drift

(Assuming devices are capable)

- Buy / export a master clock
- Import the clock on other devices
- Length Matched, External Wiring
- Configure each device's software

- PXI Chassis includes a 10 MHz clock
- Devices automatically sync (PLL)
- (Or) Share dedicated clock over internal lines
- (Either way) Can't drift even if you wanted to

CALLBACK #1…Automatic Synchronization with NI DAQmx

- PXI Chassis contains 10 MHz Clock
- Each DAQmx card PLLs to 10 MHz
- Internal Start Triggers Automatically Routed
- Result:
  - Multiple Devices in a Single Task (like TSN)
  - Start Together
  - Stay Together

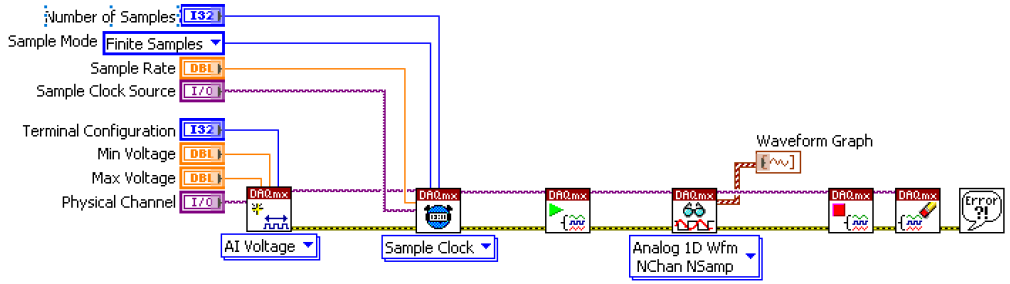

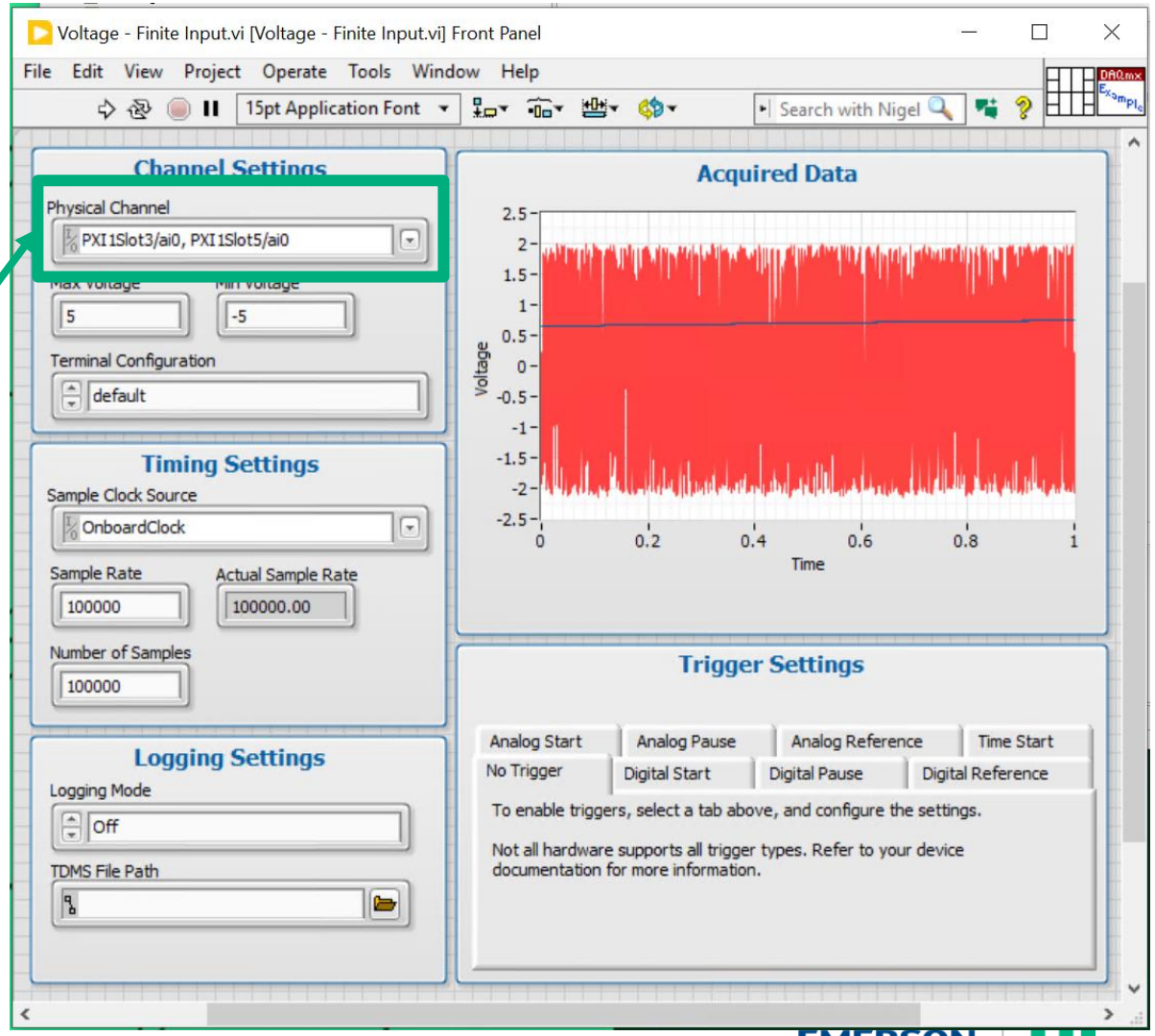

Jitter

Jitter is the deviation from the ideal timing of an event to the actual timing of an event.

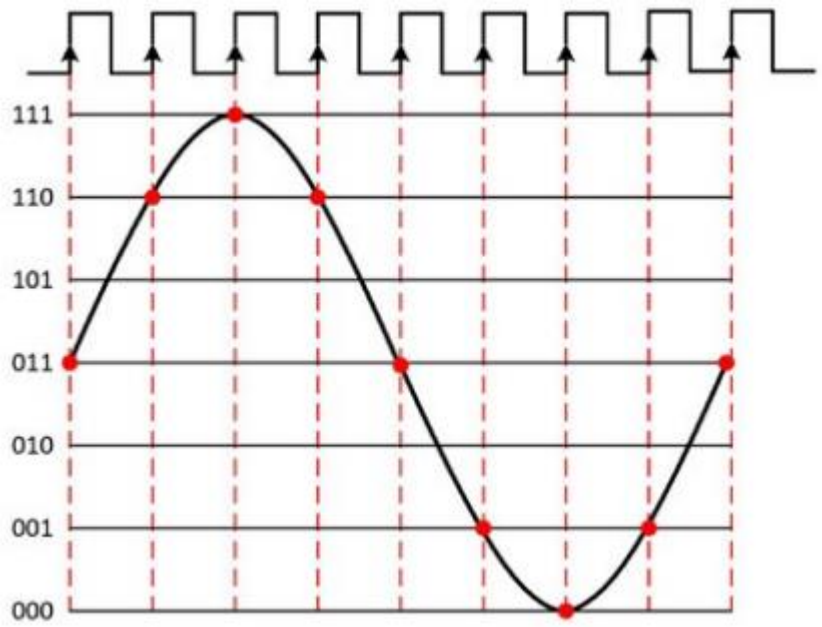

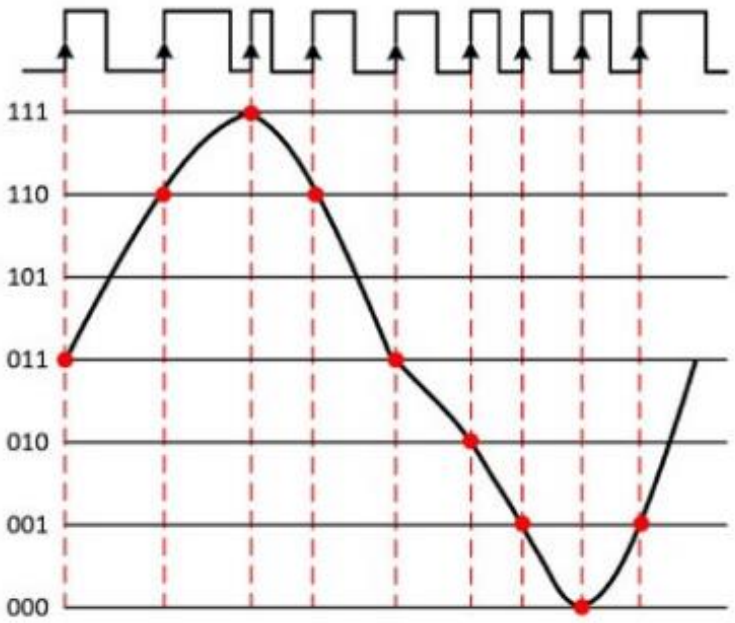

Jitter

- Buy a better clock

- Buy a better clock
  - Option 1: PXI Chassis (Link)

  - Option 2: Timing / Sync Module
    - PXI-6674T (Link)

Skew

Skew is when the clock signal arrives at different components at different times.

Maintains clock period

Causes:

- Wire Length
- Temperature Variation
- Different Input Capacitance

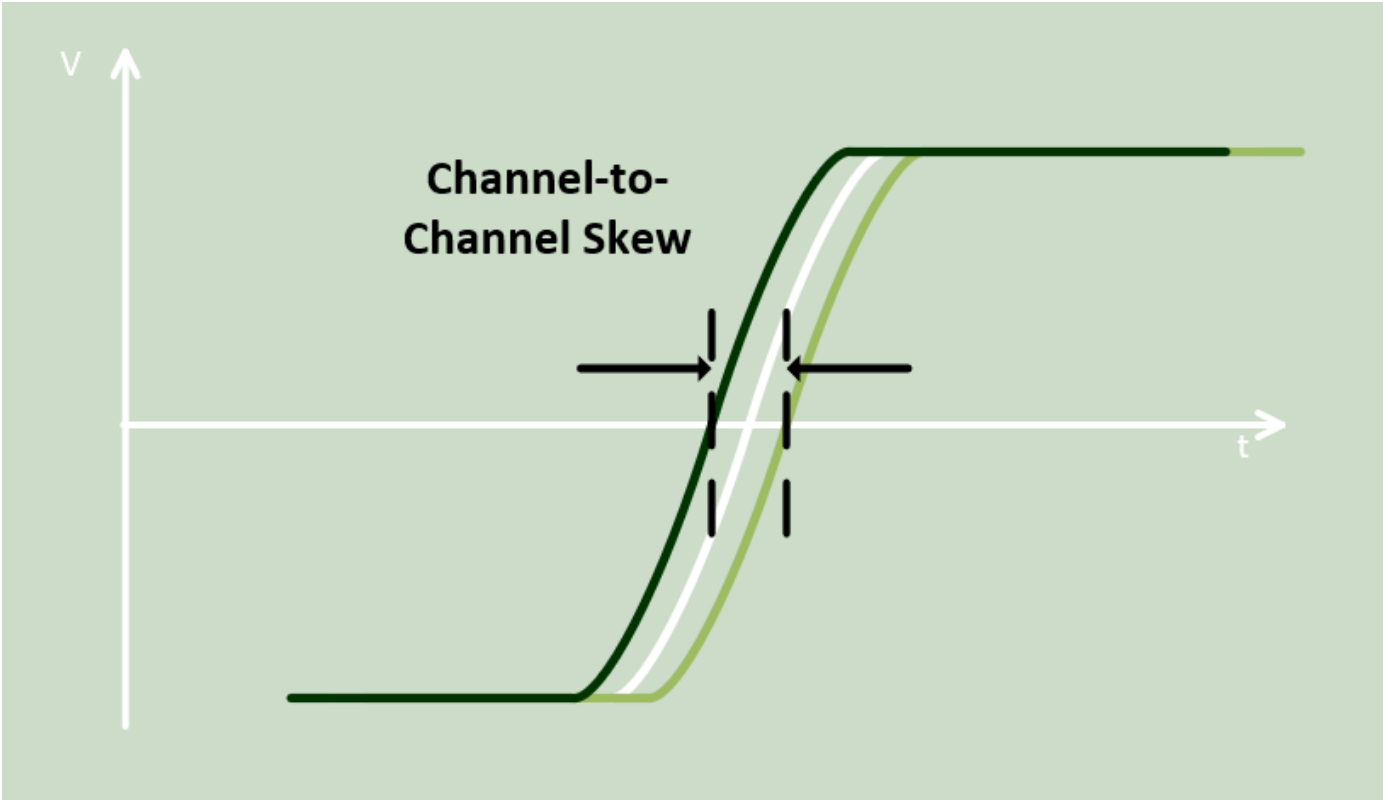

Skew

- Manually calibrate system
- Manually calculate skew
- Buy a digital delay generator
- Delay generation of clocks and trigger
- (Or) Adjust in device; per device type

- NI TCLK – Automatically handles it

Edge Detection Inconsistencies

Distributing start time triggers and handling metastability

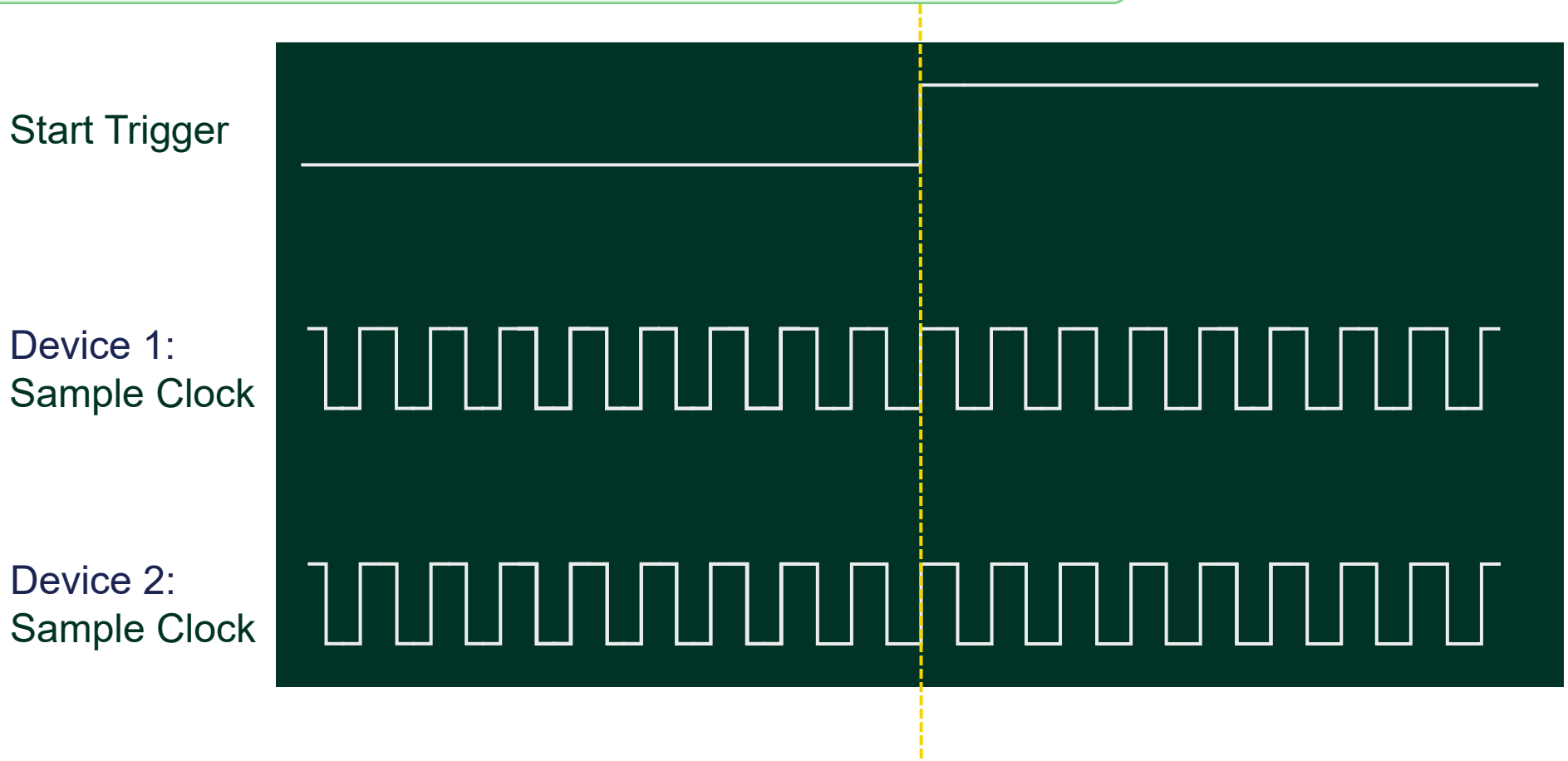

Edge Detection Inconsistencies

- ??

- NI TCLK – Automatically handles it

Configuration of all the Things

- External Wiring
- Unique in-device configurations
- Unique SCPI APIs per device family

- Base: Device HAL API (e.g. NI DAQmx)
  - All NI Drivers are Hardware Abstraction Layers
  - USB, cDAQ/cRIO, PXI, FieldDAQ → NI DAQmx
- External Signals: Device HAL API + NI Sync API
- Patented Black Magic: NI TCLK

NI APIs Offering Synchronization Capabilities

NI-DAQmx	NI-Sync	NI-TClk
Out-of-the-box synchronization for DAQ-based applications	Control and configuration of NI timing and synchronization modules	Synchronization for high-speed and trigger-critical applications

NI-DAQmx Capabilities

- Provides general-purpose synchronization for DAQ applications
- Supports most analog, digital, and multifunction IO PXI modules
- Supports mixed-mode synchronization
- Supports onboard timing sources and timing sources applied from external sources
- Enables synchronization between signals on the same device and signals hosted on multiple devices
- Supports analog and digital triggering
- Provides automatic synchronization signal routing

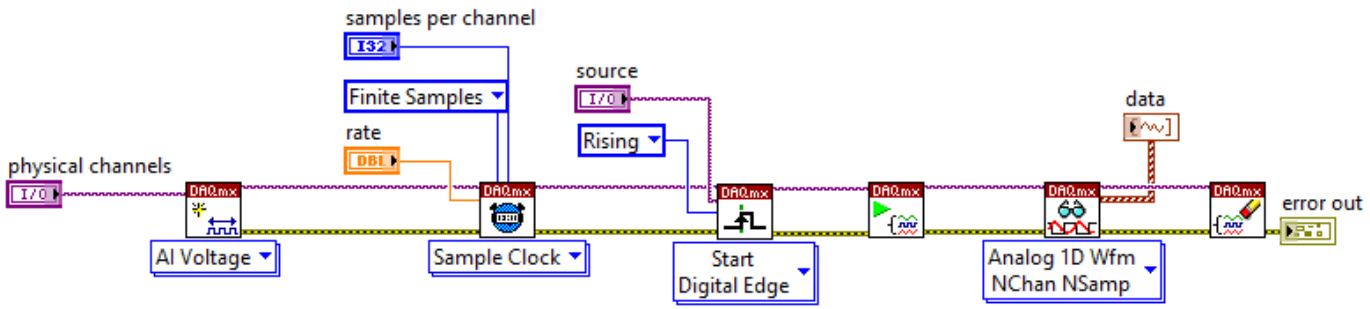

NI-Sync Capabilities

- Configure NI timing and synchronization modules and use them in conjunction with other devices
- Route clocks and triggers between devices or chassis
- Generate reference clocks and triggers
- Synchronize to an external time reference (e.g., IEEE-1588, IRIG, GPS)

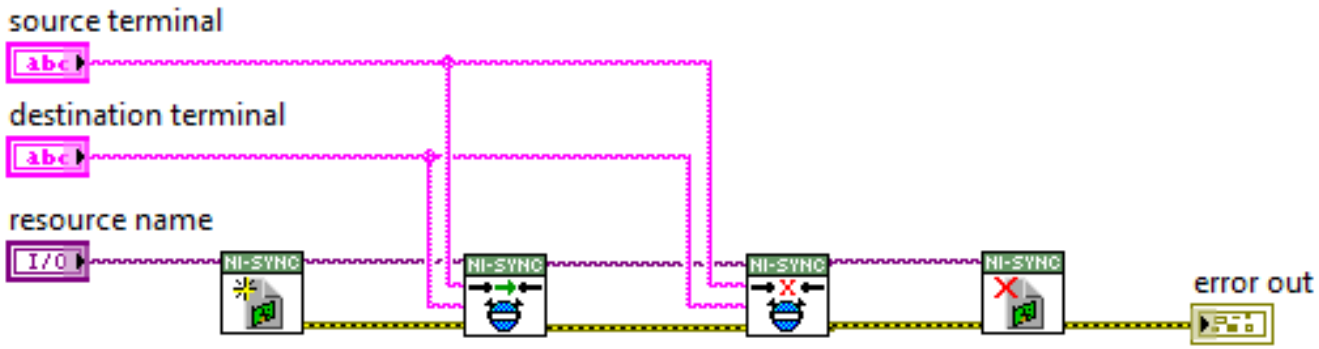

NI-TClk Capabilities

- Synchronization for instruments which perform high-speed measurements
- Ensure that devices respond to triggers at the same time
- Synchronize across multiple devices and chassis
- Synchronize to an internal or external sample clock
- Synchronize across devices which have differing sample clock rates

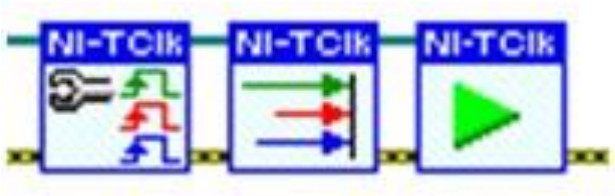

NI Timing And Sync Examples

See Shipping Examples

Example Screenshot: Importing External Clock → PXI Clock 10 w/ PLL

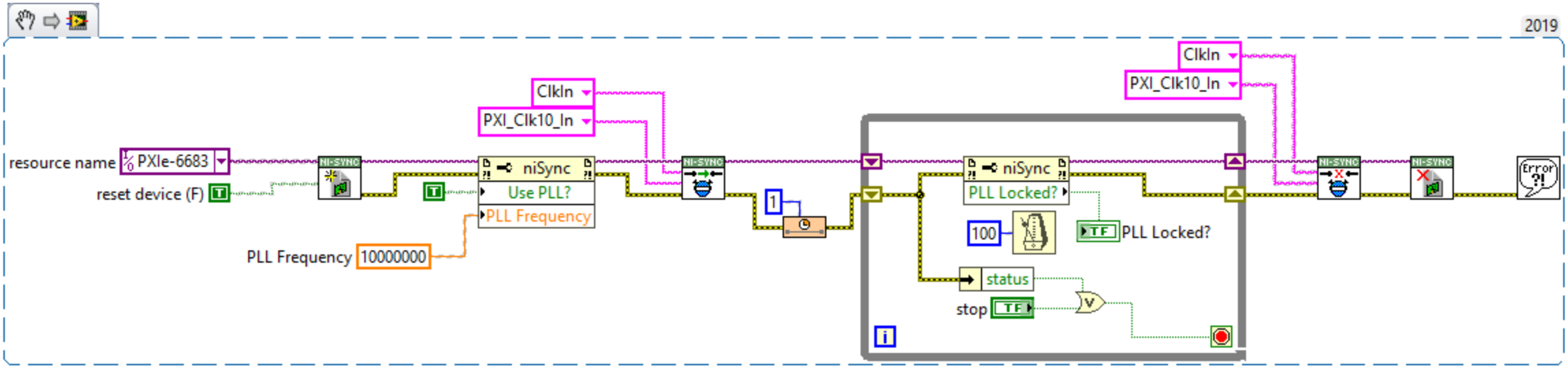

Example Screenshot: Overriding PXI Chassis Clock w/ Sync Modules Clock

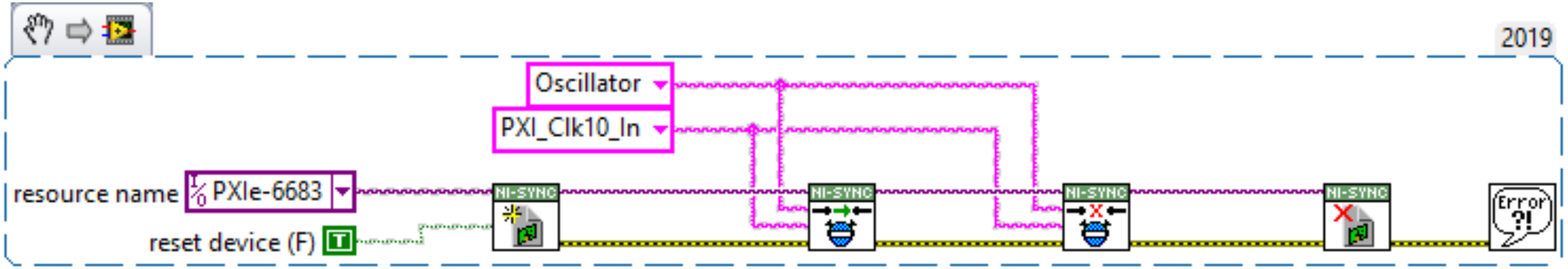

Example Screenshot: Creating Custom Clock on Sync Module and Sharing over Star Lines

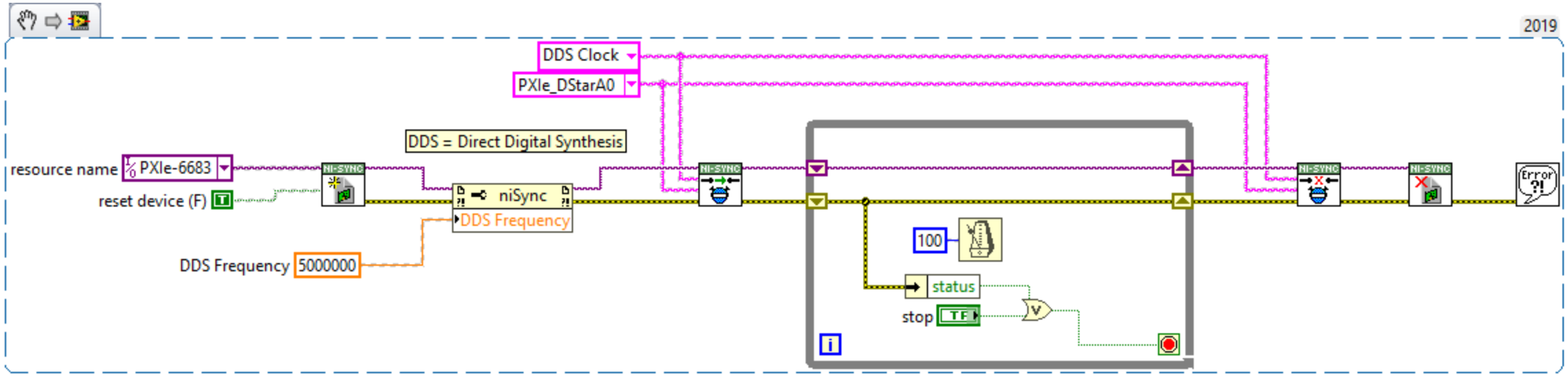

Example Screenshot: Routing an External Trigger to Star Lines

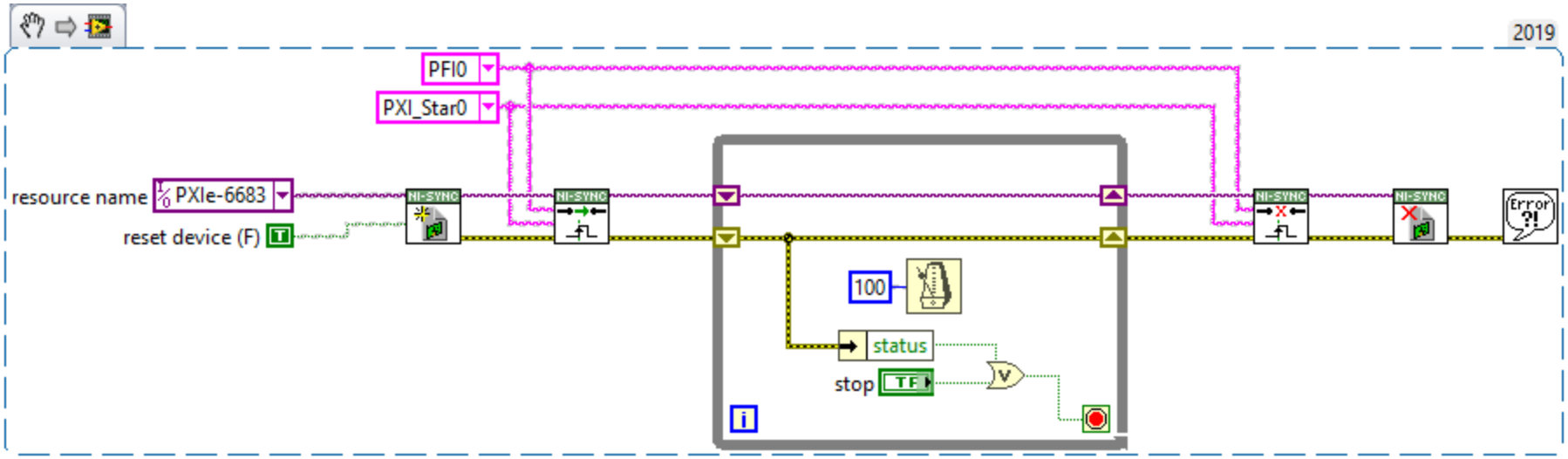

Multiple PXI Chassis Must Be Synchronized

Solution: Use NI-Sync to connect chassis clock and trigger signals.

This accommodates very large systems and distributed systems which must ensure tight coordination between measurements.

However, it requires physical connection of chassis clock and trigger signals.

Hardware Setup

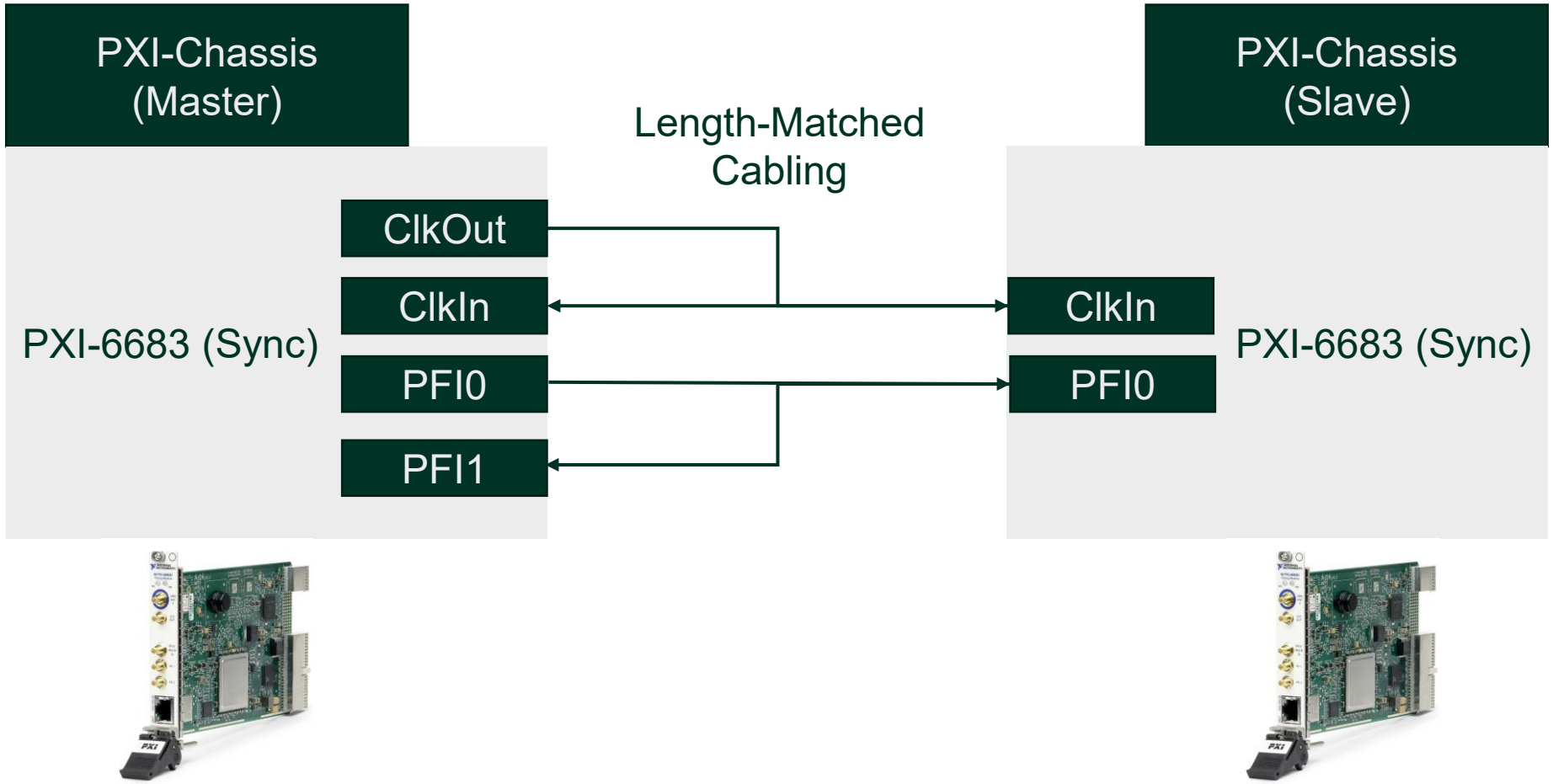

Example Screenshot: Multi-Chassis Synchronization

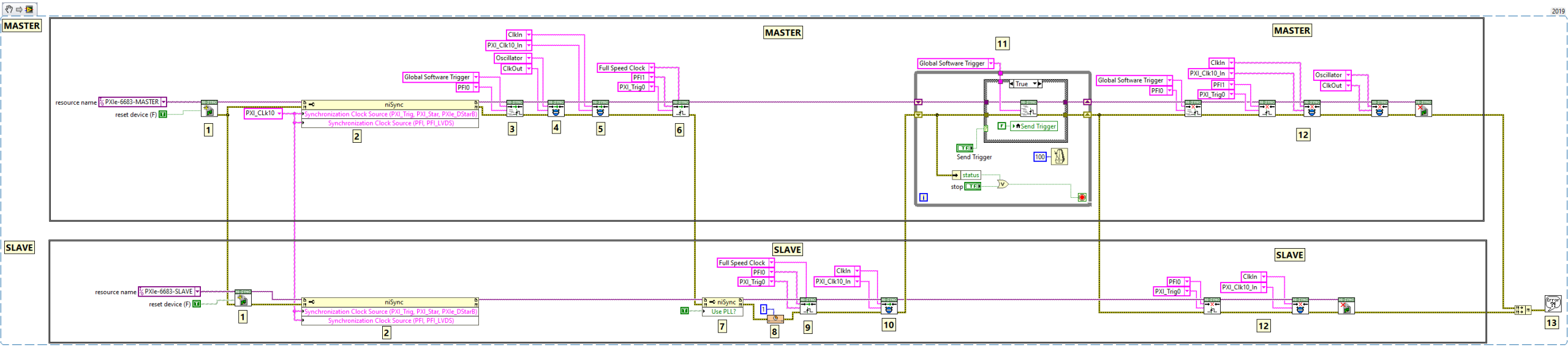

NI TCLK...CALLBACK #2

Picosecond Synchronization

EMERSON

Pesky Problems Remain…For Everyone…

- NI TCLK To the Rescue!

Synchronization Challenges

Skew

Skew is when the clock signal arrives at different components at different times.

Maintains clock period

Causes:

- Wire Length
- Temperature Variation
- Different Input Capacitance

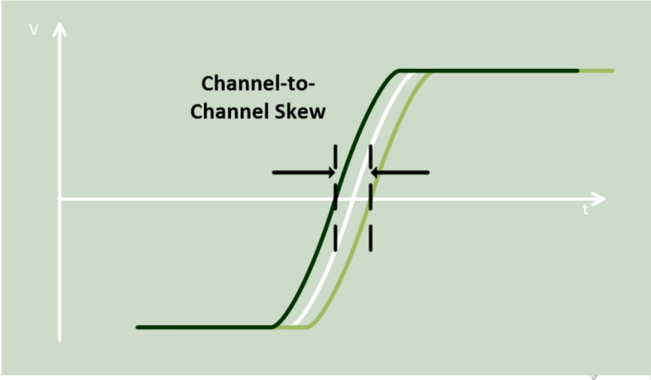

Synchronization Challenges

Edge Detection Inconsistencies

Distributing start time triggers and handling metastability

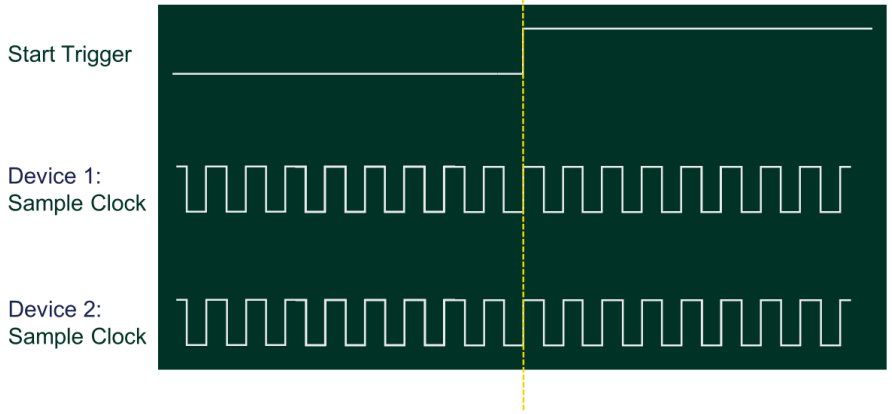

NI-TClk Capabilities

- Synchronization for instruments which perform high-speed measurements
- Ensure that devices respond to triggers at the same time
- Synchronize across multiple devices and chassis
- Synchronize to an internal or external sample clock
- Synchronize across devices which have differing sample clock rates

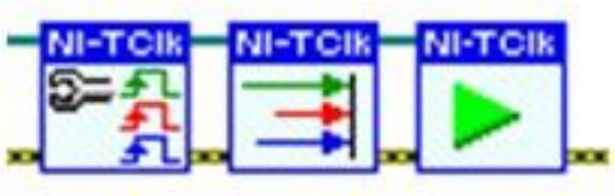

NI-TClk

- Software library targeted at high-speed signal generation and acquisition instruments
- Allows devices to respond to triggers nearly simultaneously
- Does not require devices to share clocks
- Supports synchronization among devices on single or multiple chassis

NI-TClk Operation

1. Devices start with initially unaligned sample clocks.
2. Each device generates its own TClk signal whose period is determined by the software based on the sample clock periods of all devices included in the TClk group.
3. Device sample clocks are phase-locked to the PXI 10 MHz reference clock which serves as the Sync Pulse Clock (or, optionally, to a high-precision externally supplied clock).
4. A Sync Pulse is generated, and each device waits for the first rising edge of the Sync Pulse Clock after its receipt.
5. The time between this rising edge and the first rising edge of the device's local TClk signal is measured, and the offsets are used to adjust device sample clocks and TClks to bring them into alignment.

Sample Clock, TClk, and Trigger Relation

Trigger is distributed on the falling edge of TClk signal.

Devices begin acquisition/generation on next TClk rising edge.

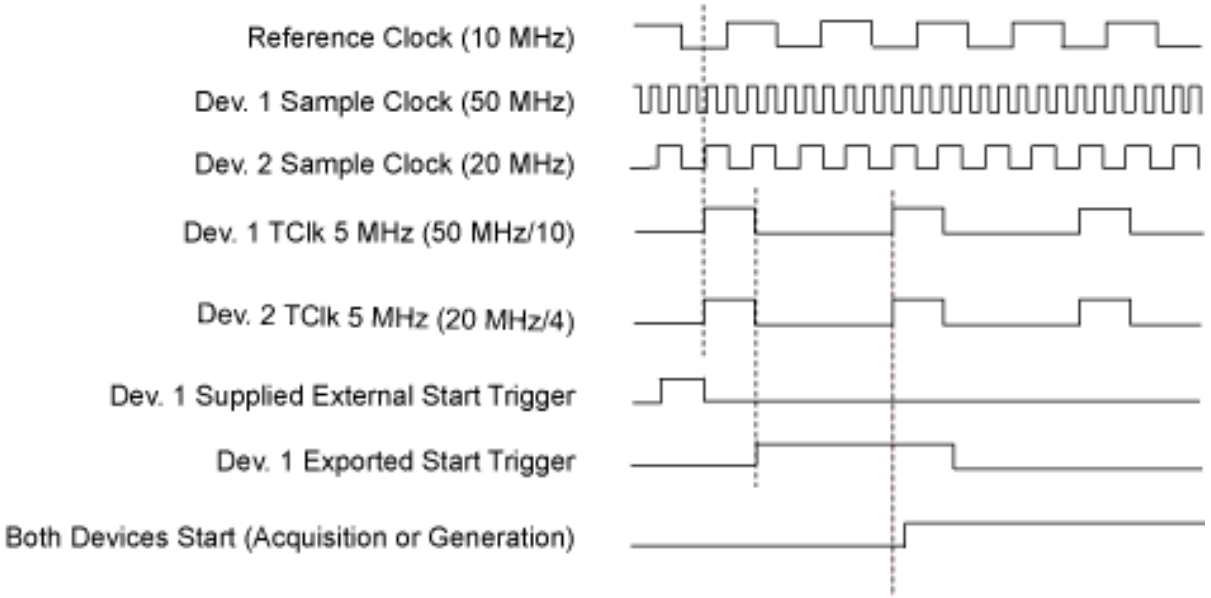

Device Correction

TCLK Driver automatically updates each device's internal phase adjustment

User can calibrate and tune these values for 10s of picosecond synchronization

Make sure your device supports TCLK (if your application requires it)

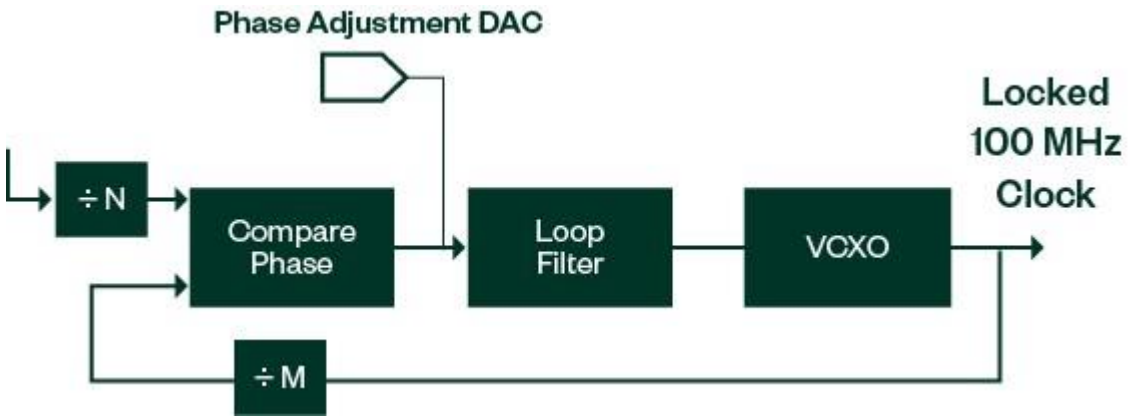

Supported PXI Cards

- Link

Device Type	Model Number
Arbitrary Waveform and Function Generators	5402, 5406, 5412, 5413, 5421, 5422, 5423, 5433, 5441, 5442, 5450, 5451
High-Speed Digitizers	5105, 5108, 5110, 5111, 5113, 5114, 5122, 5152, 5153, 5154, 5160, 5162, 5163, 5164, 5170, 5171, 5172, 5185, 5186, 5622, 5624, 5763, 5764, 5774, 5775, 5922
High-Speed Digital I/O	6541, 6542, 6544, 6545, 6547, 6548, 6551, 6552, 6555, 6556, 6561, 6562
Digital Pattern Instruments	6570, 6571
FlexRIO	5745, 5763, 5764, 5774, 5775, 5785
RF Devices and Modules	5665, 5668, 5741, 5820, 5830, 5831, 5840, 5842

Role of NI-TClk in Programming Flow

NI-TClk coordinates and aligns device sample clocks and TClks.

Devices must be configured and controlled through their own driver APIs.

Advanced features (e.g., external sample clocks and triggers) may require additional configuration specific to instrument drivers and hardware configuration.

Demo: NI TCLK → FGEN and SCOPE Synchronization

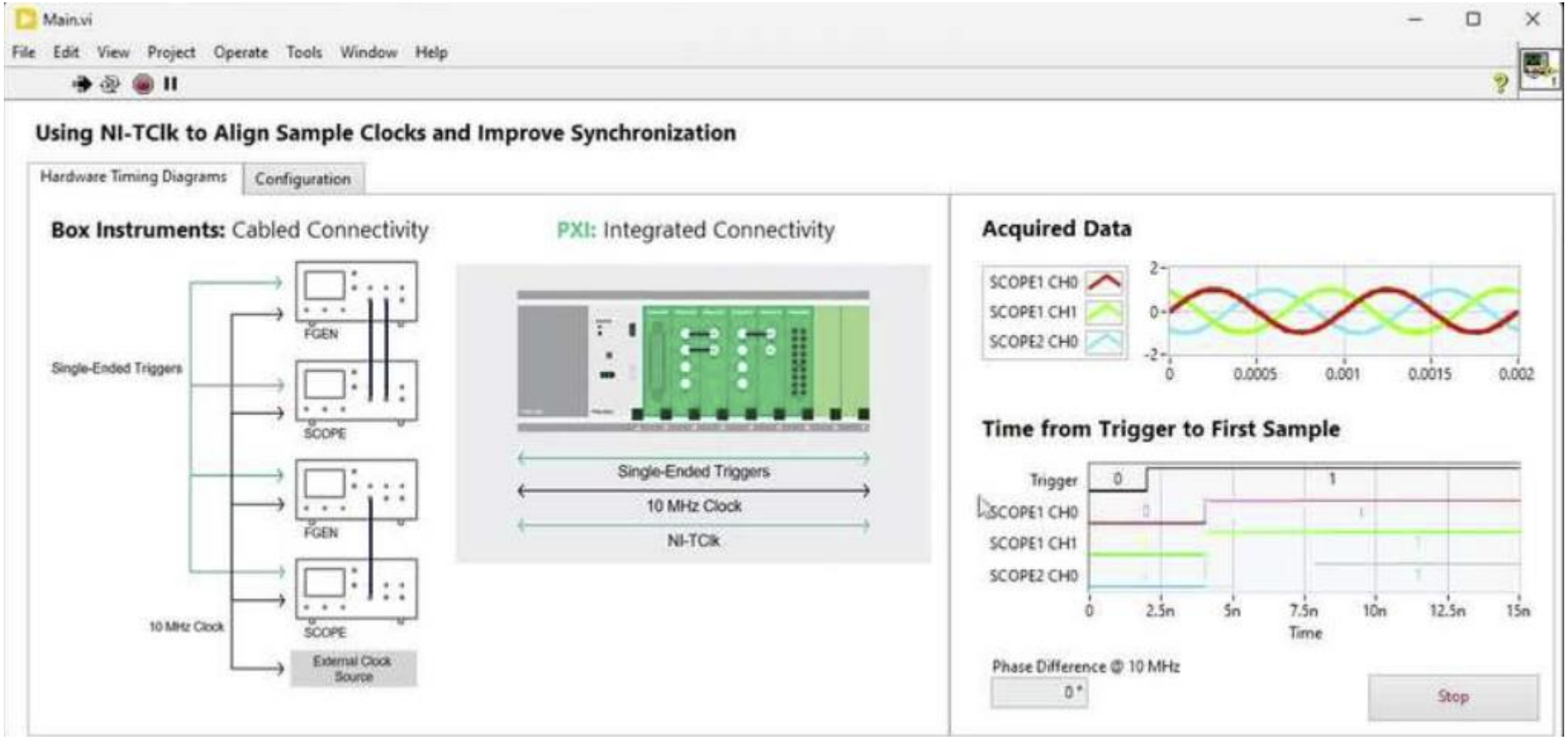

Example Code Source

- https://github.com/eatondan/ni-LunchAndLearn-SignalBasedSynchronizationFundamentalsExamples
  - Source\MI Sync With TClk

Example Screenshot: Single Chassis with Synchronous Triggers

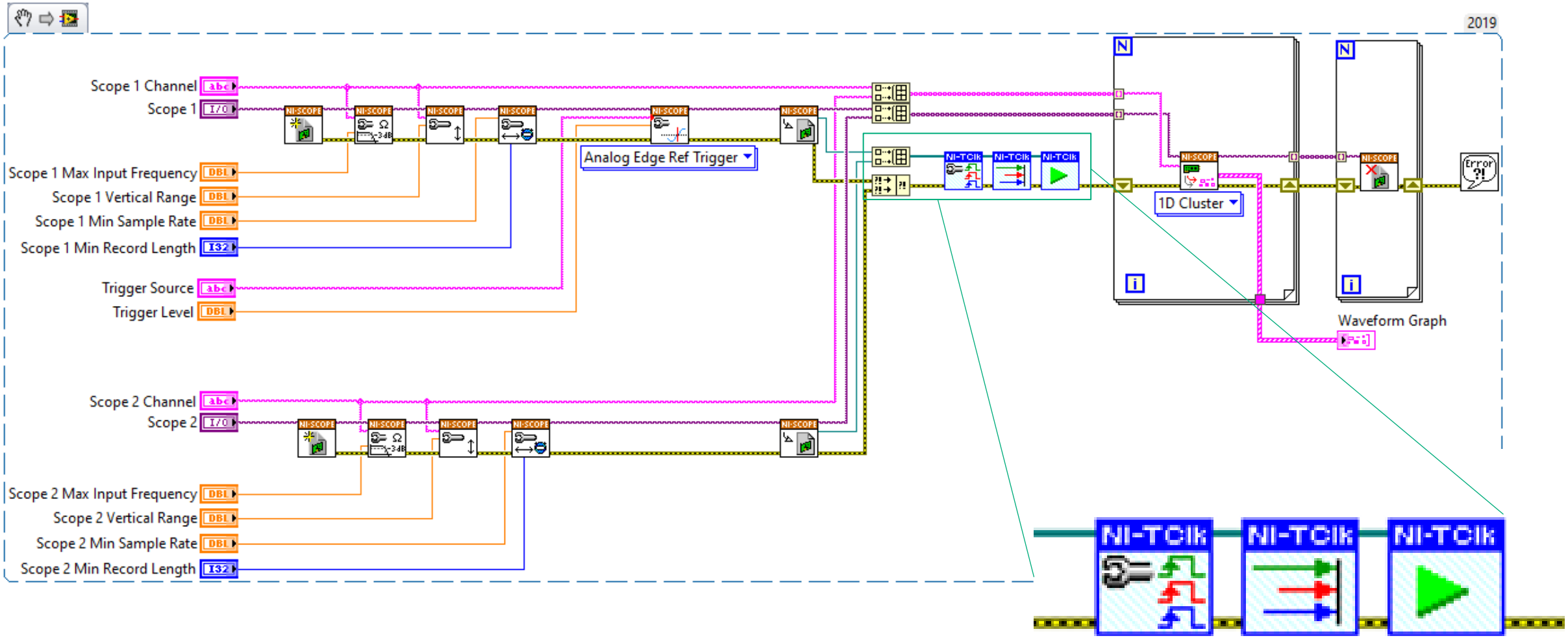

Hardware Setup

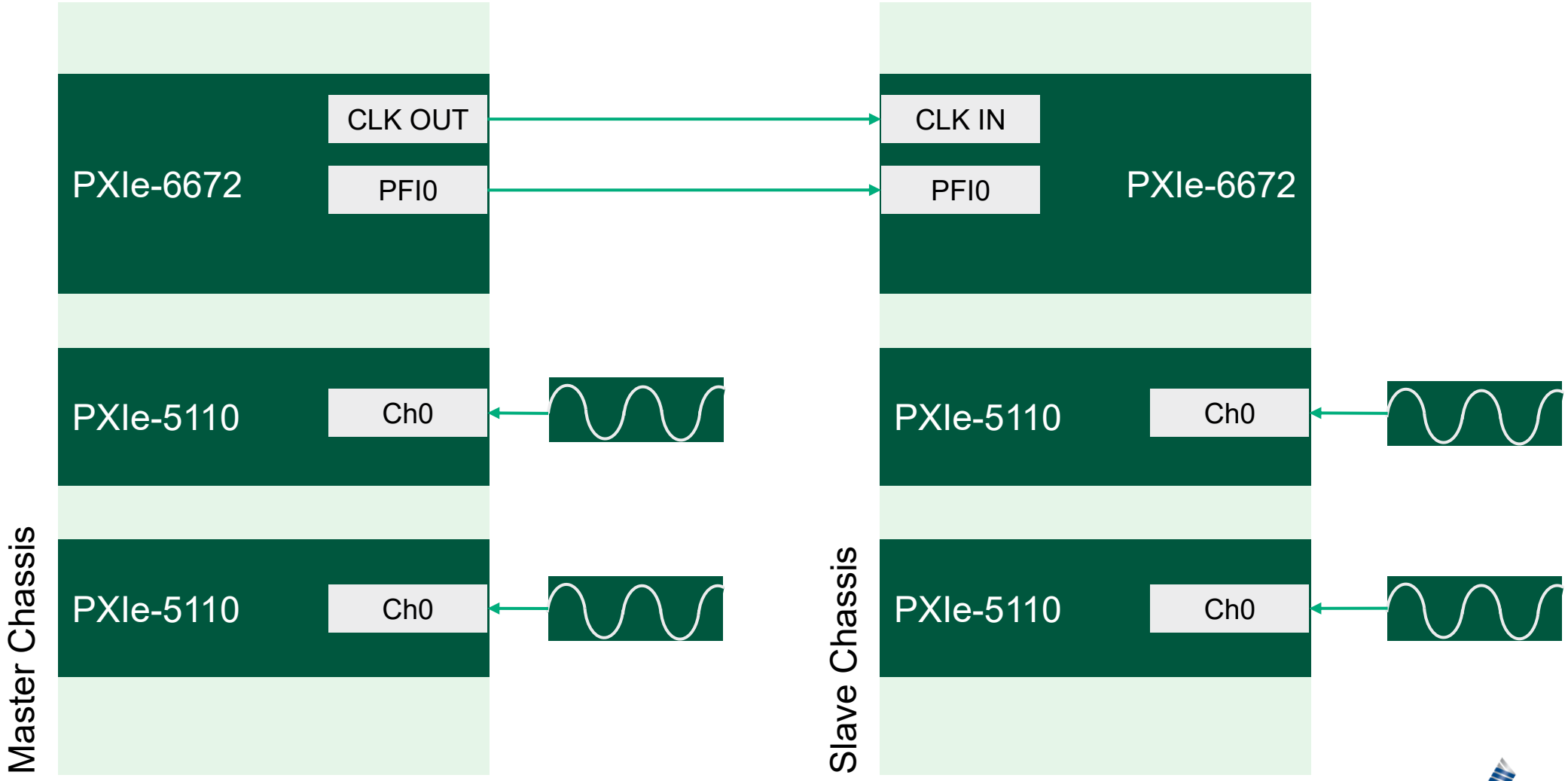

Example Screenshot: Multi-Chassis Synchronization

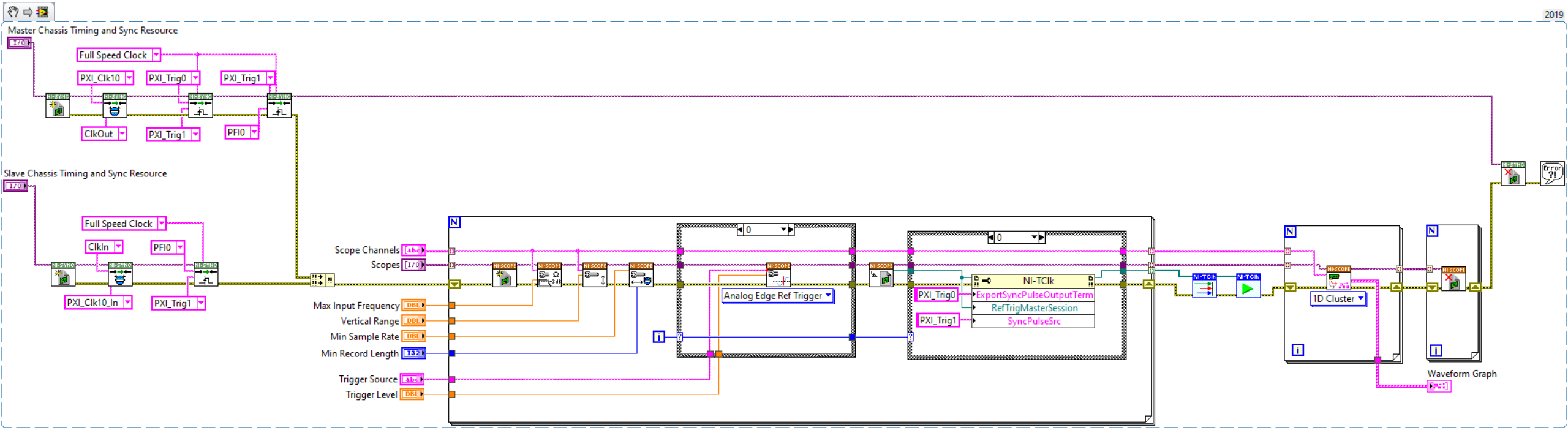

Additional TCLK Resources

- In-depth Tutorial: Link
- Calibrating NI TCLK (Getting to 10s of picoseconds): Link
- Shipping Examples:

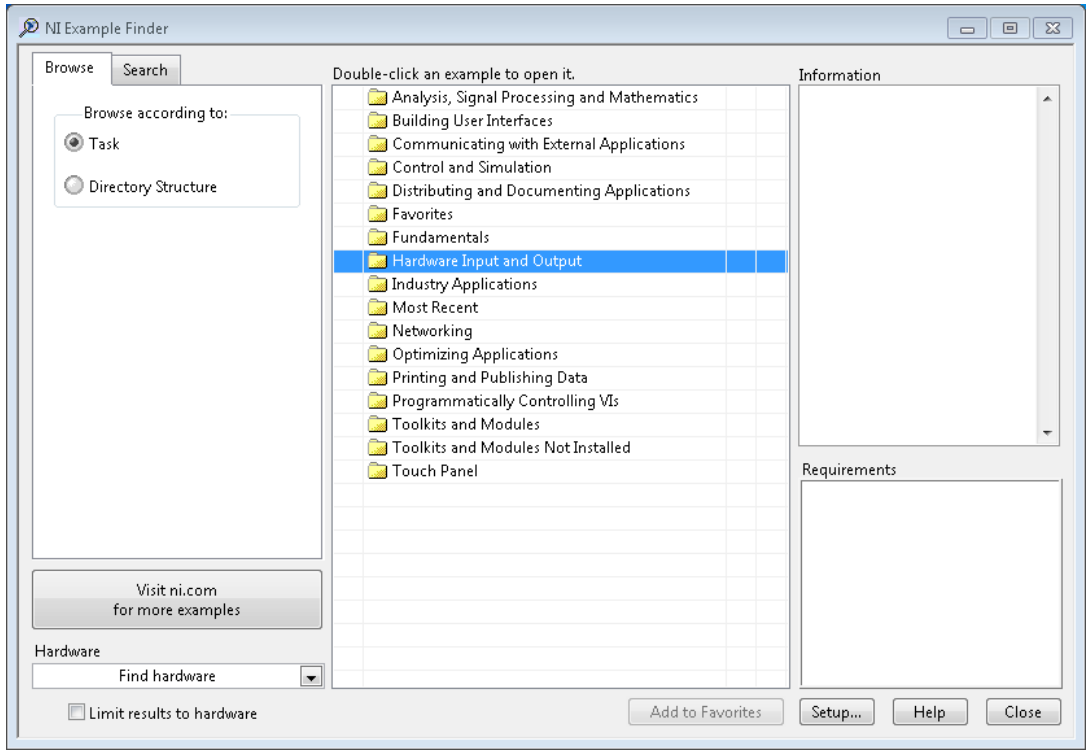

Additional Synchronization Resources

- Training: Link to Purchase
- Training: Link to OnDemand

TSN Appendix

TSN Enabled cRIO, cDAQ, & FieldDAQ

If 1 microsecond is enough… NI TSN Enabled Devices…

TSN Synchronizes multiple devices with no programming required

Formalized as IEEE 802.1 AS (an IEEE 1588 profile)

Synchronized networked systems within 1 µs of network time

Synchronize distributed measurements within 1 µs

- Same start time
- No drift over time

How: Plug in ethernet cables…

Supported Devices: TSN Enabled cRIO, cDAQ, & FieldDAQ

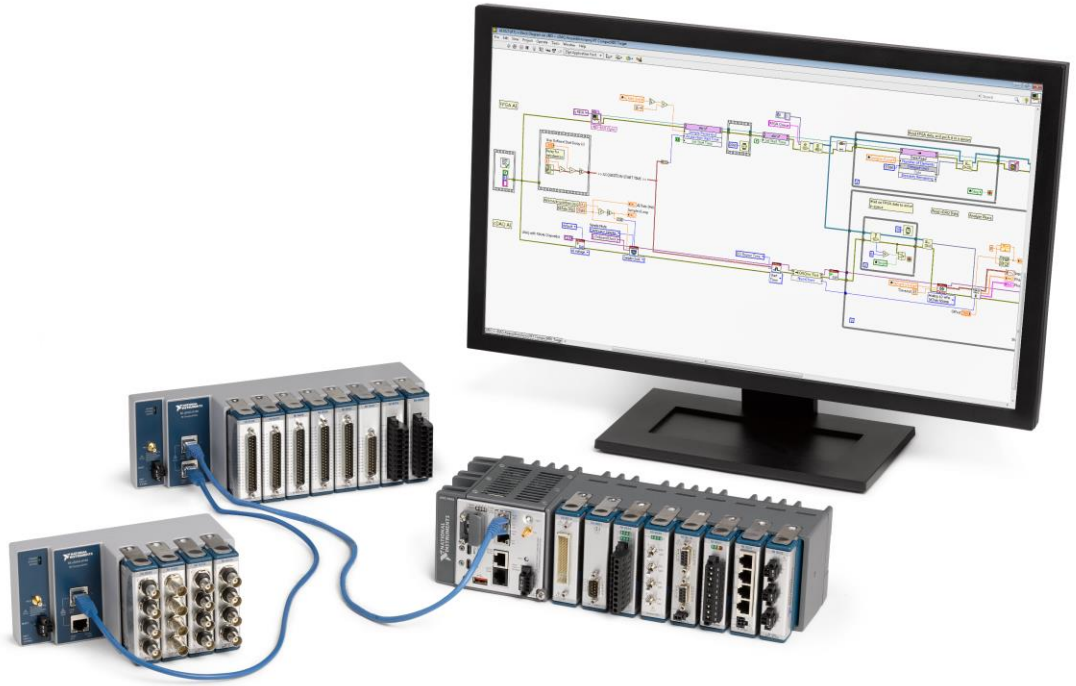

CALLBACK COMING…

IEEE 802.1AS on CompactRIO And Industrial Controllers

Time Synchronization

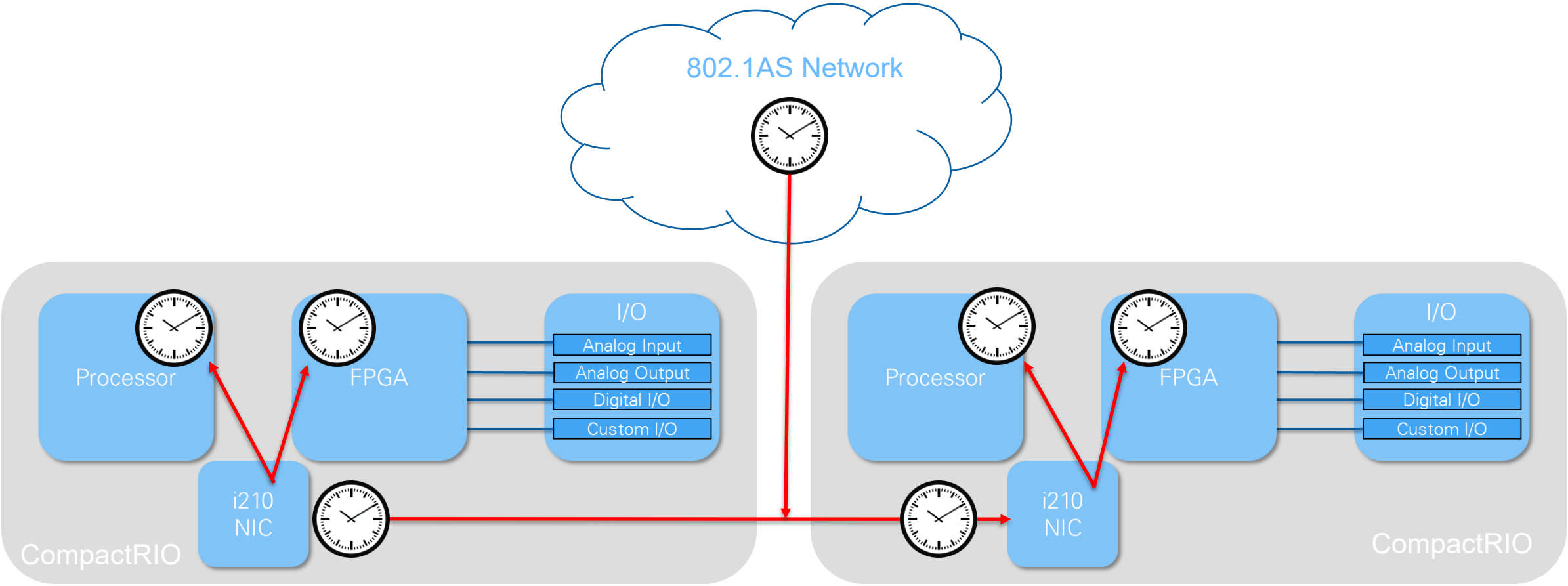

All CPUs and FPGAs agree on time (enables start time synchronization)

Local clocks are disciplined (eliminates drift)

Chassis Clock Generation & AI Timing Engines

Chassis Clock Generation

Network Time

Adjusts

Figure 7-1. Clock Routing Circuitry

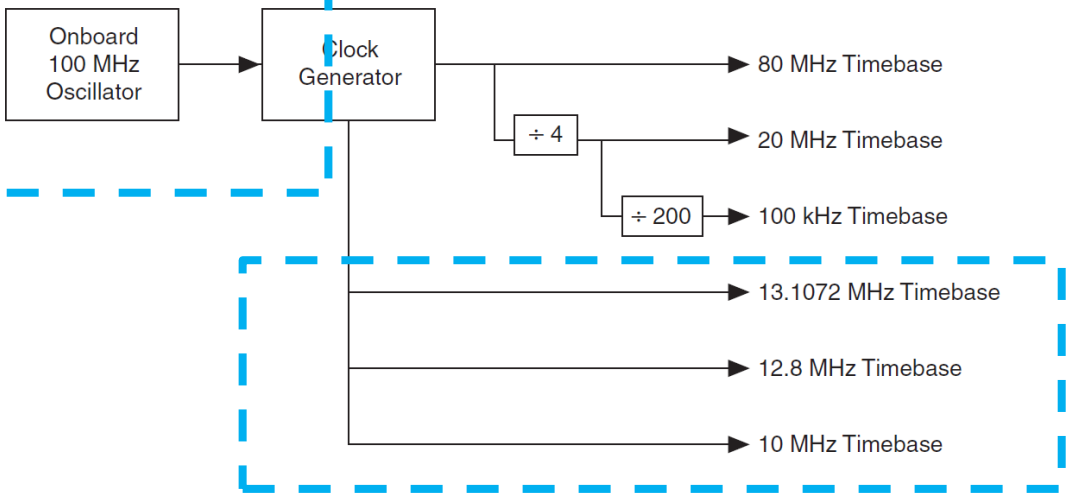

Only on TSN Chassis

AI Timing Engines

Figure 3-1. AI Sample Clock Timing Options

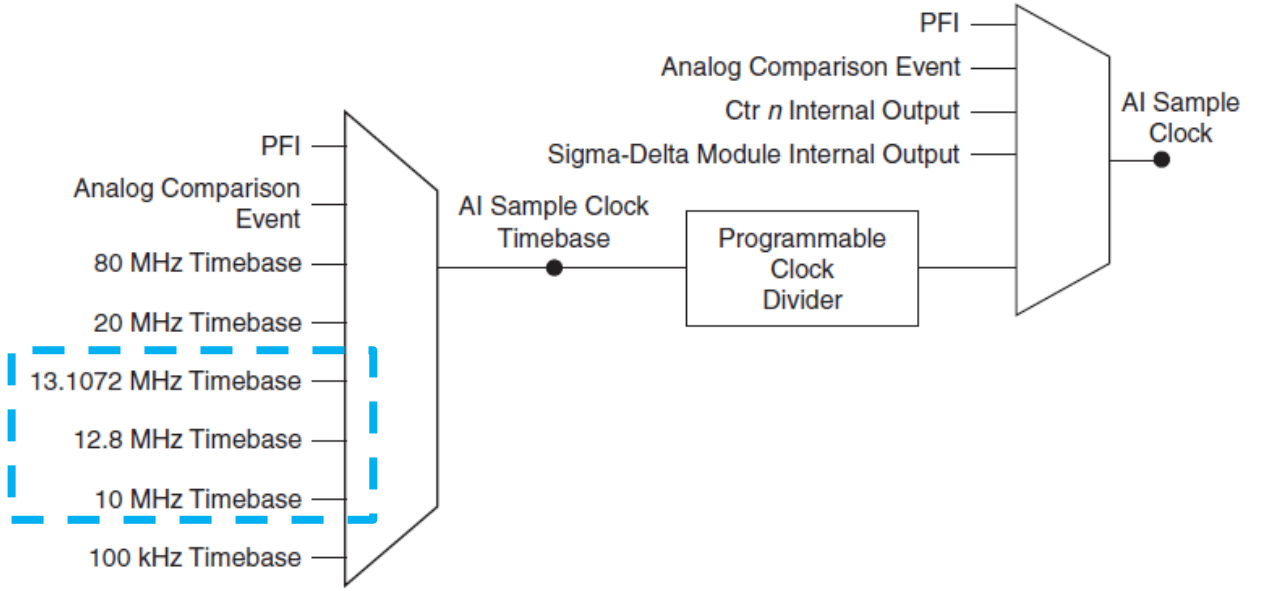

Questions?

Daniel Eaton
Chief Field Applications Engineer
CLA, CLED, 20 years “doing” w/ NI
Daniel.eaton@emerson.com

We are here to help!

- Pull us in to design conversations
- Let us help de-risk projects
- Tell us what you want to learn about next

NI is now part of Emerson.